STOVAX

Decorative Flue Cover

RVFS - SFCO

for Riva Studio Freestanding

(MODELS: RVFS-1 & RFVS-2)

Installation Instructions

For use in GB & IE (Great Britain and Republic of Ireland)

CE

This appliance has been certified for use in countries other than those stated. To install this appliance in these countries, it is essential to obtain the translated instructions and in some cases the appliance will require modification. Contact Stovax for further information.

IMPORTANT

This item will become hot whilst in operation.
Please read these instructions carefully in conjunction with the Instructions for Installation & Use supplied with the appliance.
Keep them in a safe place for future maintenance.

PM504 Issue 3 (August 2011)

INSTALLATION INSTRUCTIONS

GENERAL

This decorative flue cover is designed to be fitted with the Riva Studio Freestanding, models: RVFS-1 & RVFS-2.

IMPORTANT

Please read these instructions carefully and in conjunction with Instructions for Use, Installation & Servicing (PM452). Keep them together in a safe place as they will be needed when maintenance or servicing is required. Care must be taken when handling the appliance to avoid personal injury, or damage to the appliance.

The rear of the appliance must be at least 75mm from the wall to ensure adequate access to carry out this installation. For minimum clearances to non-combustible walls please refer to Section 4 of the Site Requirements in the Instructions for Use, Installation & Servicing (PM452) supplied with the appliance.

IMPORTANT FLUE REQUIREMENTS

The Riva Studio Freestanding must be fitted with 150mm (6") vitreous flue pipe as supplied by Stovax retailers.

Where the flue pipe passes through a combustible ceiling the single wall flue must convert into a twin wall system approved to all of the requirements of EN1856-1:2003 and fitted in line with the manufacturers instructions.

If the twin wall flue system continues in the room above inside an enclosure, and a ventilated fire stop is fitted in accordance with Annex ZA of EN1856-1:2003, the optional decorative flue cover is NOT recommended. For an alternative decorative option use the gloss flue pipe supplied by Stovax retailers or, if it is essential to fit the optional decorative flue cover, the flue cover must be cut to finish at least 150mmm below the ventilated fire-stop to allow unimpeded air flow.

If the twin wall flue pipe system continues unenclosed in the room above, and it is fitted with a non-ventilated fire stop, the optional decorative flue cover can be fitted as described.

PACKING LIST

1 x Decorative flue cover
2 x Flue clamp assemblies
1 x Finishing collar assembly
4 x M6 x 12 cap head screws
10 x M4.2 x 9.5 stainless steel self tapping screws
1 x Cardboard installation template
1 x Instructions

1

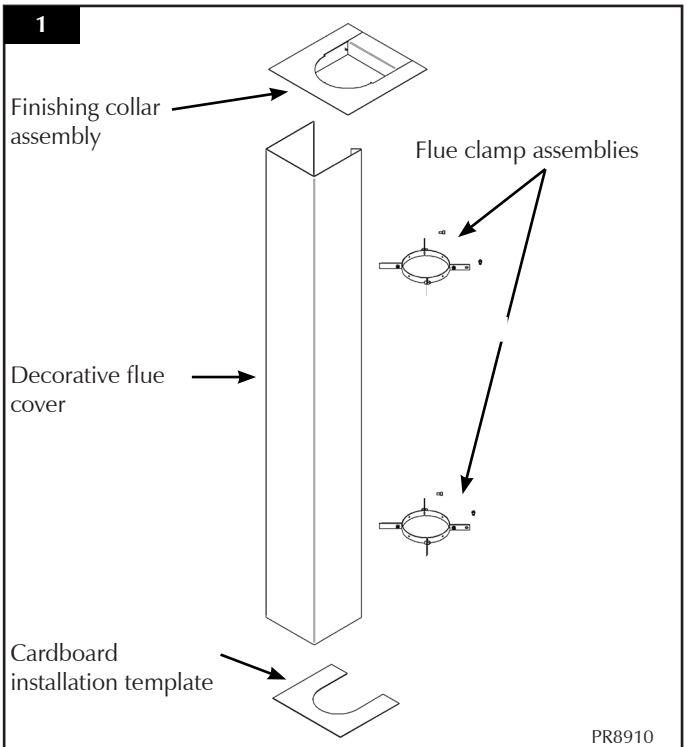

1. CUTTING FLUE COVER

1.1 The decorative flue cover is provided in one length of 1800mmm**. The cover must sit at least 2mm above the top of the appliance or glass top plate (if fitted)**.

1.2 Measure the required length of flue cover from the bottom upward allowing for the 2mm gap between appliance and flue cover. **Do not cut the flue cover shorter than 1100mm.**

1.3 Mark **all the way around** the flue cover. **Only remove material from the top end of the cover** (see Diagram 2).

2

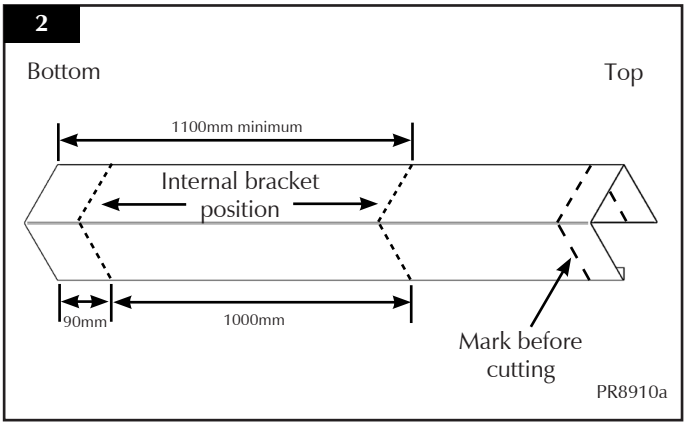

1.4 Using a disc cutter, carefully cut the decorative flue cover to the required length. A finishing collar is provided to hide any rough edges (see Section 4) but it is important to ensure the cut edge is straight.

INSTALLATION INSTRUCTIONS

2. ATTACHING CLAMPS TO FLUE

The two clamp assemblies need to be fixed around the flue pipe to hold the decorative flue cover in place. Fitting will be easier with 2 people.

2.1 First, ensure the 150mm (6") flue pipe has been installed as detailed in *Instructions for Use* (*PM452) Installation Instructions, Section 1, Top Flue Installation*.

2.2 Before fitting the decorative flue cover on the appliance **protect the top of the appliance or glass top plate, if fitted, with the cardboard template supplied** by positioning it around the flue pipe as shown in Diagram 3.

3

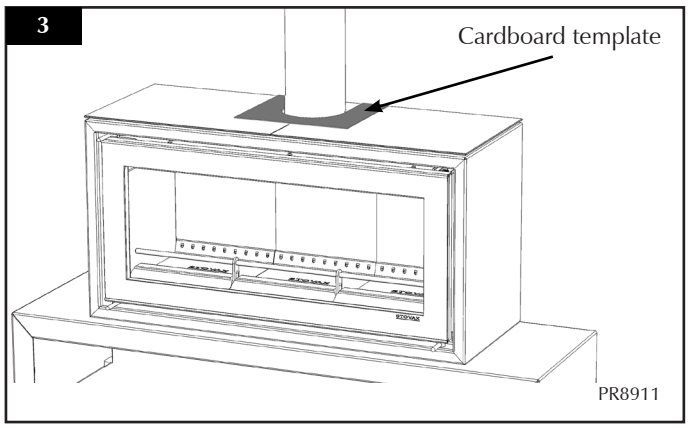

NOTE: THE CARDBOARD IS REQUIRED TO MAINTAIN A MINIMUM 2MM GAP BETWEEN THE FLUE COVER AND APPLIANCE OR GLASS TOP PLATE.

2.3 The flue clamps are supplied loosely assembled. Place them around the flue pipe (it will be necessary to undo one screw to achieve this if the flue system is fully installed).

2.4 Attach the lower clamp assembly so that the base is 90mm above the top of the cardboard template but do not fully secure it.

2.5 Ensure the sections with rear clamp holes at the end of the arms are facing the rear of the appliance (see Diagram 4).

4

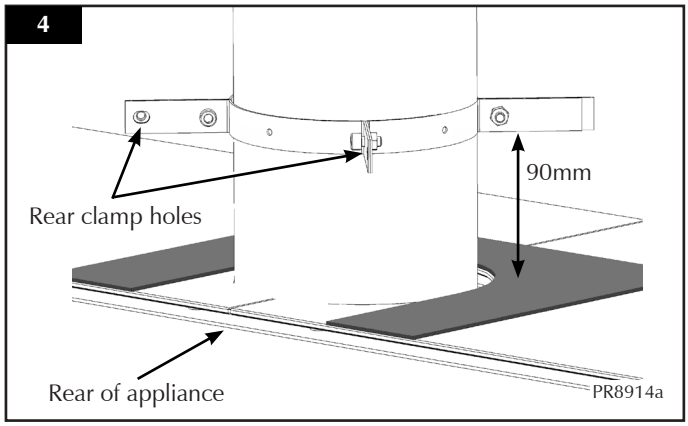

2.6 Attach the upper clamp assembly so that the base is 1000mm above the lower clamp assembly so that it grips the flue pipe but do not fully secure it (see Diagram 5).

5

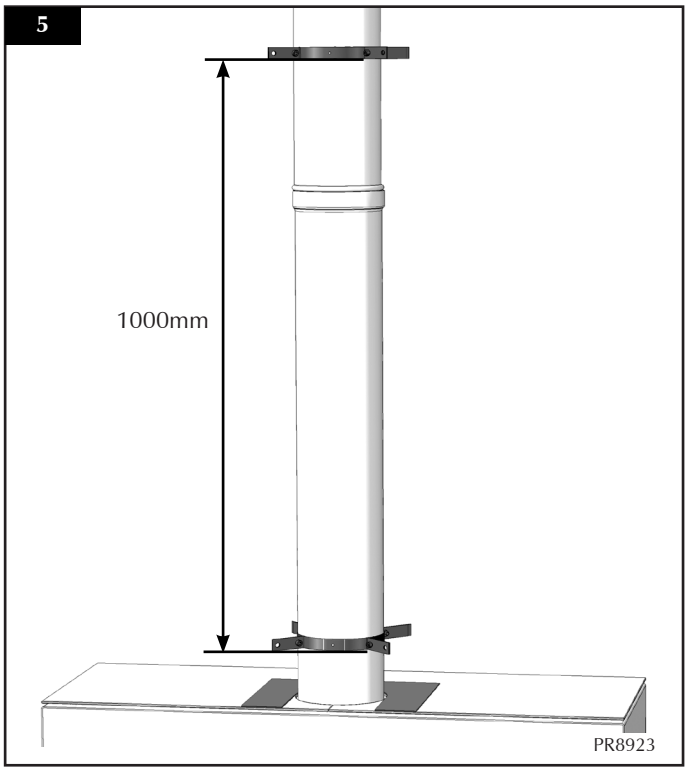

2.7 Ensure the sections with rear clamp holes at the end of the arms are facing the rear of the appliance (see Diagram 4).

2.8 Fit the flue cover by gently pulling apart the open edges and easing it over the front clamp arms. The rear clamp arms should sit inside the flue cover brackets.

2.9 Ensure the flue cover is resting on the cardboard, the opening is facing the rear of the appliance and the front clamp arms are located in the front corners of the flue cover (see Diagram 6).

6

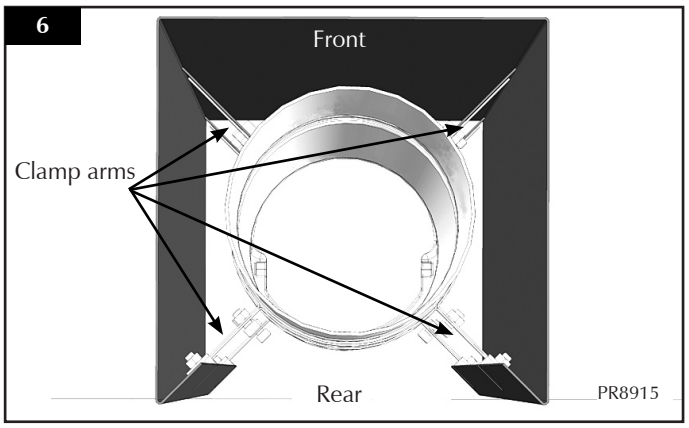

INSTALLATION INSTRUCTIONS

2.10 Align both clamp assemblies with the 4 x rear location nuts in the flue cover (there is no need to fix the clamps at this stage (see Diagram 7).

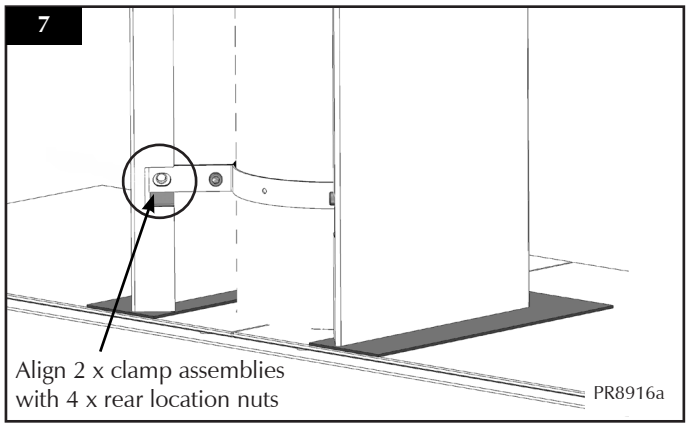

2.11 Ensure the flue cover is square to the appliance.

2.12 Mark a line along the bottom of the lower flue clamp assembly (see Diagram 8).

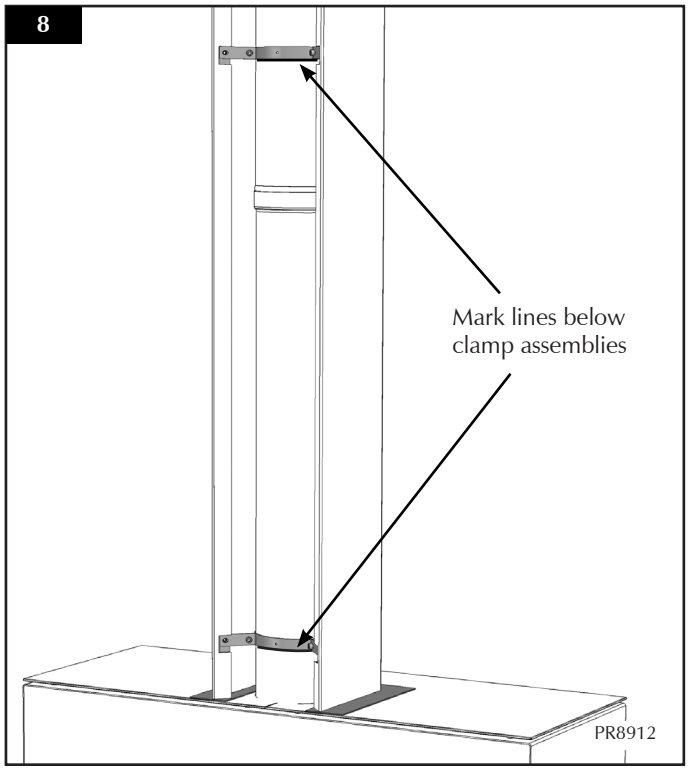

2.13 Mark another line under the upper clamp assembly (see Diagram 8).

2.14 Disengage both clamp assemblies from the 4 x rear location brackets in the flue cover and carefully remove the flue cover by gently pulling apart the open edges and easing it over the front clamp arms.

2.15 Check that the lower flue clamp assembly is still horizontal and the bottom edge is 90mm above the top of the cardboard template **all the way around** (see Diagram 9).

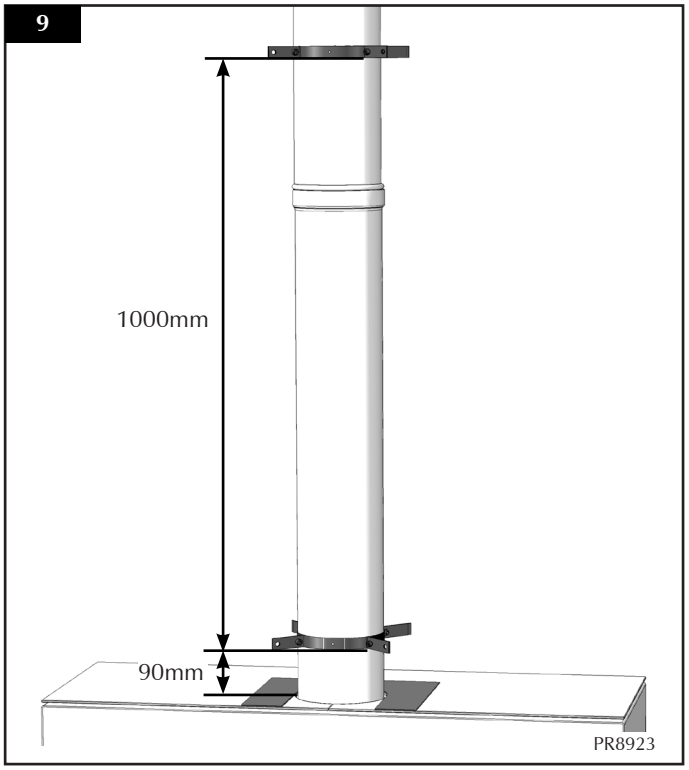

2.16 Check that the upper flue clamp assembly is still horizontal and the bottom edge is 1000mm above the bottom edge of the lower clamp assembly **all the way around** (see Diagram 9).

2.17 Once the position of the clamps is set, tighten them around the flue pipe using the cap head screws (supplied with the flue clamp assemblies) and hexagon key (supplied with the appliance) (see Diagram 10).

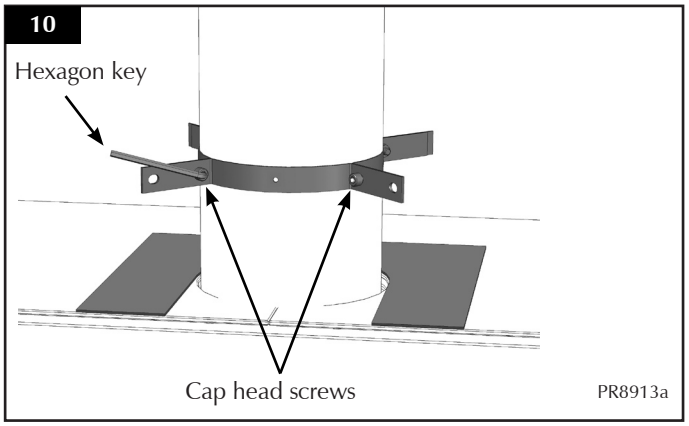

2.18 If the clamps do not fit tight around flue pipe, self adhesive heat resistant flat rope can be used to fill the gap.

2.19 Carefully replace the flue cover to check the alignment with the clamp assemblies by following points 2.8 - 2.10.

Make any necessary adjustments before proceeding to the next step.

INSTALLATION INSTRUCTIONS

2.20 Using a 3.5mm bit, drill 4 x holes in the flue pipe through the 4 x holes in each clamp assembly.

2.21 Secure the clamps to the flue pipe using the 8 x stainless steel self tapping screws supplied (see Diagram 11).

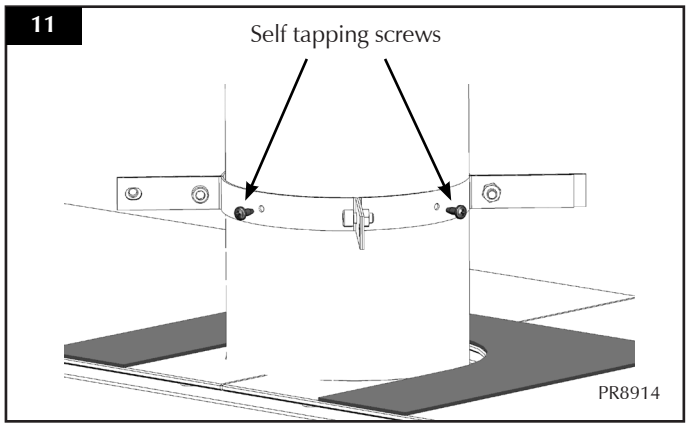

3. PREPARATION OF THE FINISHING COVER

Before attaching the decorative flue cover it is necessary to prepare it for the fitting of the finishing collar.

3.1 With the flue cover stood upright on a flat surface (not on the appliance) place the front section of the finishing collar over the top edge of the flue cover.

3.2 Ensuring that the open edge of the finishing collar is aligned with the open edge of the flue cover (see Diagram 12).

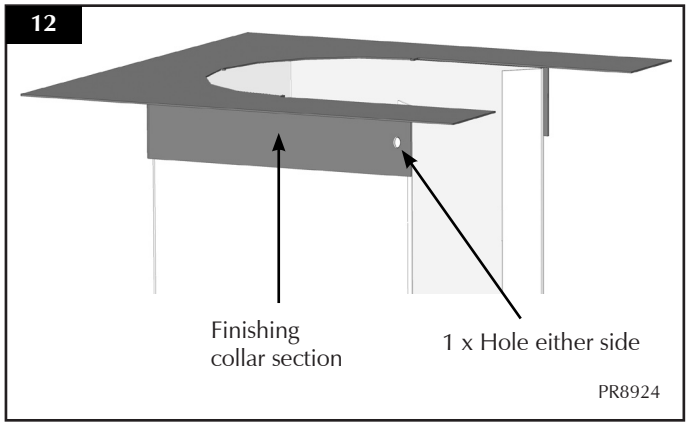

3.3 Ensure the finishing collar is horizontal **all the way around** and mark on the flue cover the location of the hole on either side of the finishing collar.

3.4 Remove the finishing collar.

3.5 Using a 3.5mm bit, drill 2 x holes as marked on the flue cover.

4. FITTING FLUE COVER

4.1 To fit the flue cover over the clamps gently pull apart the rear, open edges and ease the flue cover over the front clamp arms.

4.2 Ensure the flue cover is resting on the cardboard, the opening is facing the rear of the appliance and the front clamp arms are located in the front corners of the flue cover (see Diagram 13).

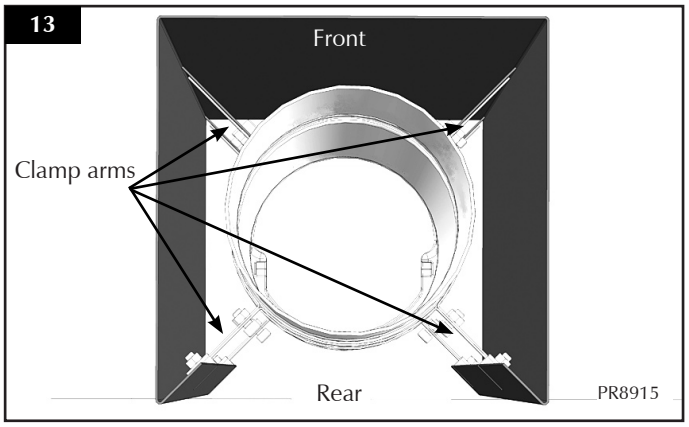

4.3 Slot the rear clamp arms into the brackets in the open edges of the flue cover.

4.4 Ensure the flue cover is positioned square to the appliance.

4.5 Fix the rear clamp arms (top and bottom) to the flue cover brackets using the 4 x cap head screws (supplied with the flue clamp assemblies) and hexagon key (supplied with the appliance) (see Diagram14).

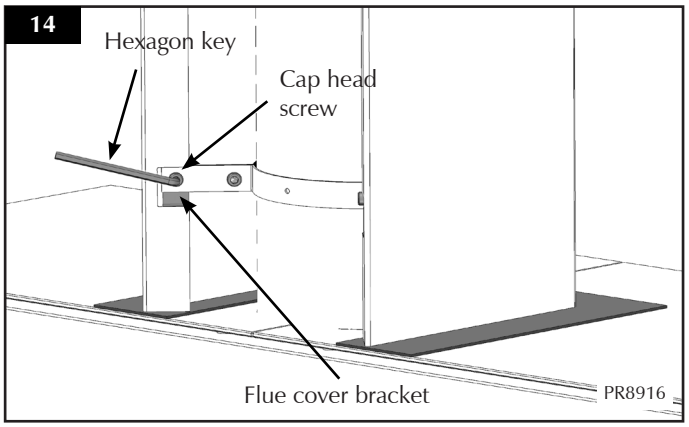

4.6 When the flue cover is secure **remove the cardboard template**. It may be necessary to **gently** lift the flue cover to release the template.

4.7 **Ensure the bottom of the flue cover clears the top of the appliance or glass top plate by at least 2mm all the way around.**

INSTALLATION INSTRUCTIONS

5. FITTING THE FINISHING COLLAR

DO NOT stand on the appliance to fit the finishing collar. A suitable step ladder must be used and attention paid to health and safety requirements.

5.1 Slide the front section of the finishing collar over the top of the decorative flue cover, ensuring the opening faces the rear of the appliance (see Diagram 15). Take care not to scratch the flue cover.

NOTE: The finishing collar should sit on the top edge of the flue cover.

15

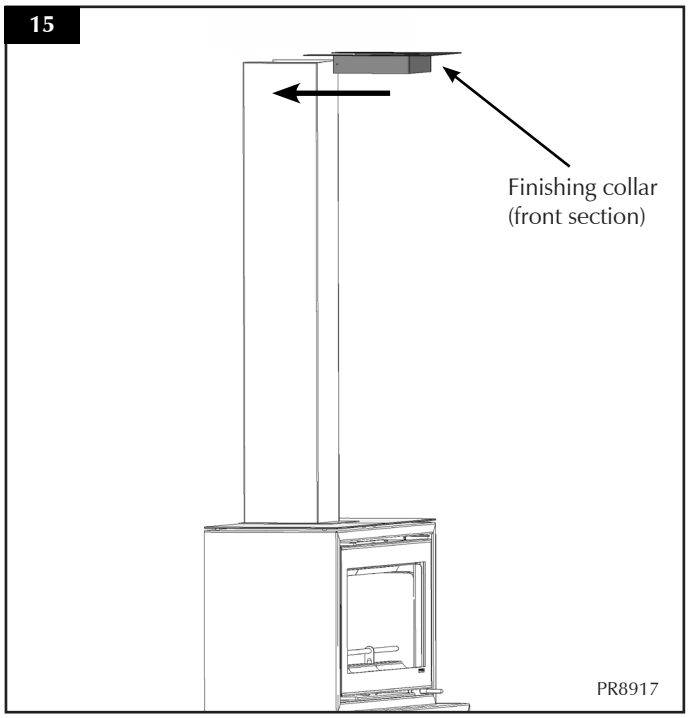

5.2 Slide the rear section of the finishing collar over the rear of the flue cover, ensuring the arms sit over the top of the front finishing collar section (see Diagram 16).

16

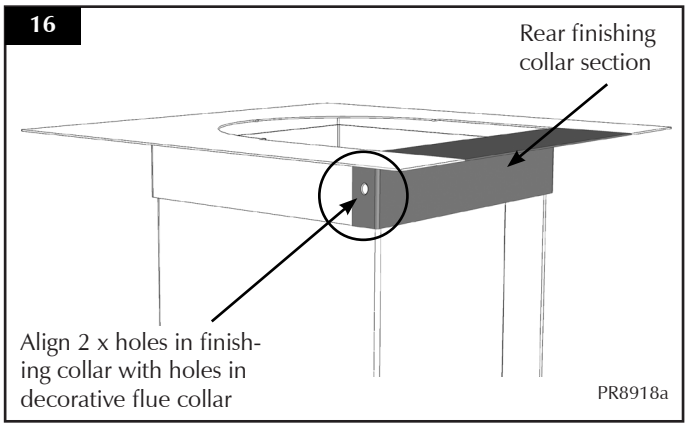

5.3 Line up the holes in both sections of the finishing collar with those drilled in the flue cover (see Diagram 16).

5.4 Secure finishing collar to the flue cover using 2 x self tapping screws (supplied) (see Diagram 17).

17

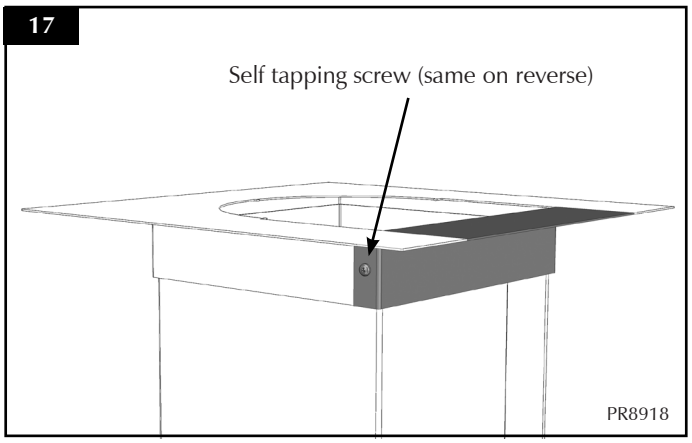

NOTE: ENSURE THE CARDBOARD TEMPLATE HAS BEEN REMOVED BEFORE USING THE APPLIANCE.

BASIC SPARE PARTS

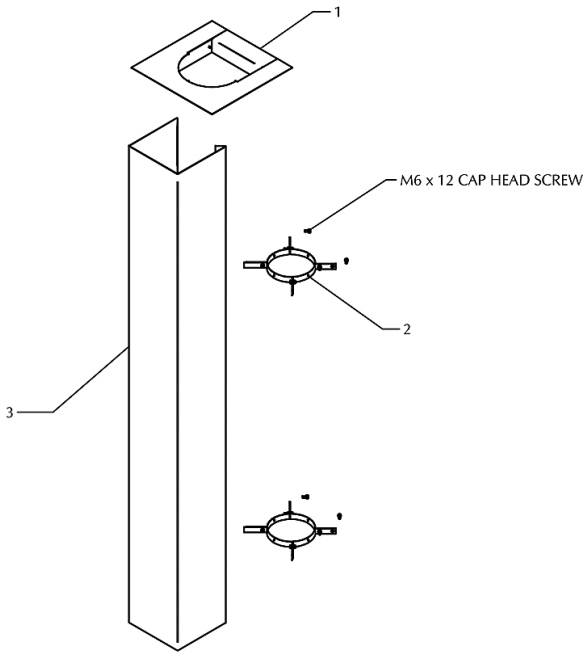

Ref. No.	Product Code	Drawing No. (if different)	Description
1	**MEC8863**		CEILING PLATE ASSEMBLY
2	**MEC8836**		6" FLUE PIPE COMPLETE CLAMP ASSEMBLY
3	**MEC8843**		6" SQUARE FLUE COVER ASSEMBLY

STOVAX

Stovax Ltd, Falcon Road, Sowton Industrial Estate, Exeter, Devon, England EX2 7LF

Tel: **(01392) 474011** Fax: **(01392) 219932** E-mail: **info@stovax.com** **www.stovax.com**