GAZCO

Spacer Frame

for use with 16" Logic Electric

Installation Instructions

For use in GB, IE (Great Britain and Eire)

IMPORTANT

These instructions should be read in conjunction with the Instructions for Use, Installation and Servicing supplied with the appliance. Keep all instructions together in a safe place for future reference.

PR1409 Issue 1 (October 2011)

INSTALLATION INSTRUCTIONS

PLEASE READ THESE INSTRUCTIONS CAREFULLY, AND IN CONJUNCTION WITH THE INSTRUCTIONS SUPPLIED WITH THE APPLIANCE (PR1280) **BEFORE** INSTALLING YOUR APPLIANCE.

1. FIXING THE FRAME TO THE WALL

The Spacer Frame is designed to allow the 16" Logic Electric to be mounted on to a flat wall. The frame is secured to the wall using the wall plugs and wood screws provided via the four holes in the rear of the frame (see Diagram 1).

1

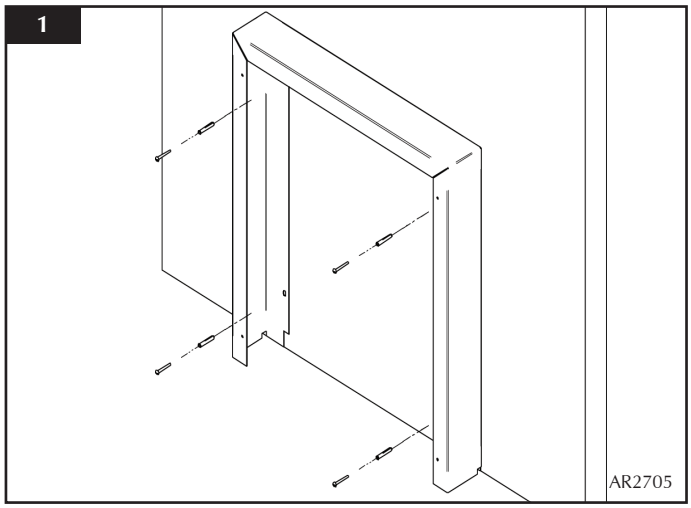

1.1 Place the spacer frame against the wall and mark the position of the four holes.

1.2 Drill the holes and insert the four wall plugs.

1.3 Secure the spacer frame to the wall using the four wood screws (see Diagram 2).

2

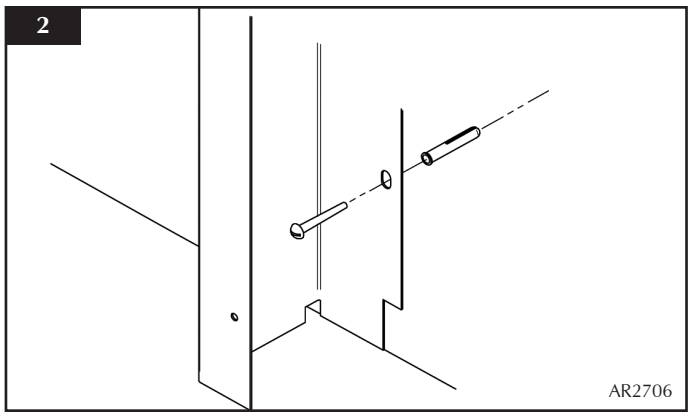

2. FIXING THE APPLIANCE TO THE FRAME

2.1 Position the appliance inside the spacer frame and secure it via the four locating holes using the pozidriv screws provided (see Diagram 3).

3

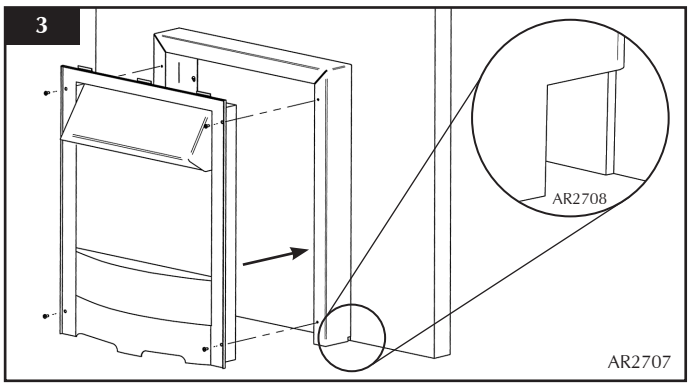

2.2 The appliance cable can be slid through the square cutout on either side of the spacer frame (see detail, Diagram 3).

3. FITTING THE DECORATIVE FRAME

BOX PROFIL FRAME

3.1 Attach the Box Profil frame using the magnets provided (see Diagram 4). Please refer to the instructions supplied with the appliance to complete the frame installation.

4

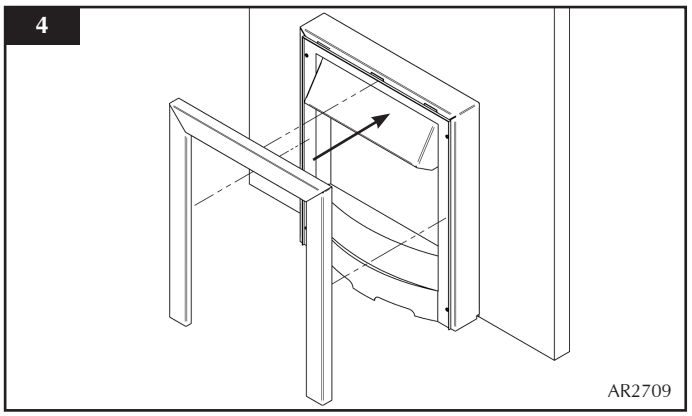

PROGRESS FRAME

3.2 Hook the Progress frame over the top edge of the appliance and secure it at the base via the two brackets (see detail, Diagram 5) using the screws provided. Fit the ash cover over the hooks on the base of the frame.

5

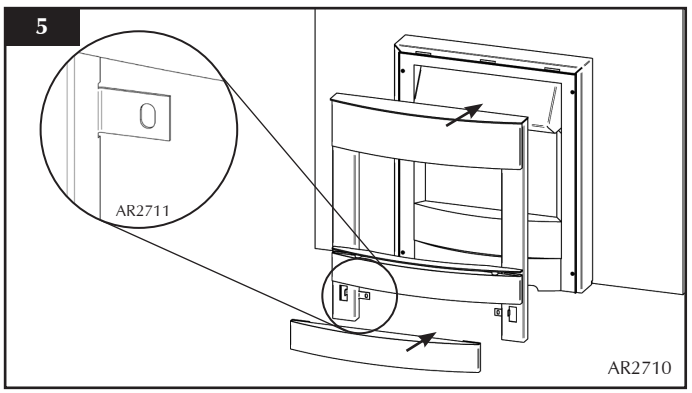

Gazco Limited, Osprey Road, Sowton Industrial Estate, Exeter, Devon, England EX2 7JG
Tel: (01392) 261999 Fax: (01392) 444148 E-mail: info@gazco.com

A member of the Stovax Group