(P) 8686MLUC RIVA F40 AVANTI MIDI BALANCED FLUE - LOGS

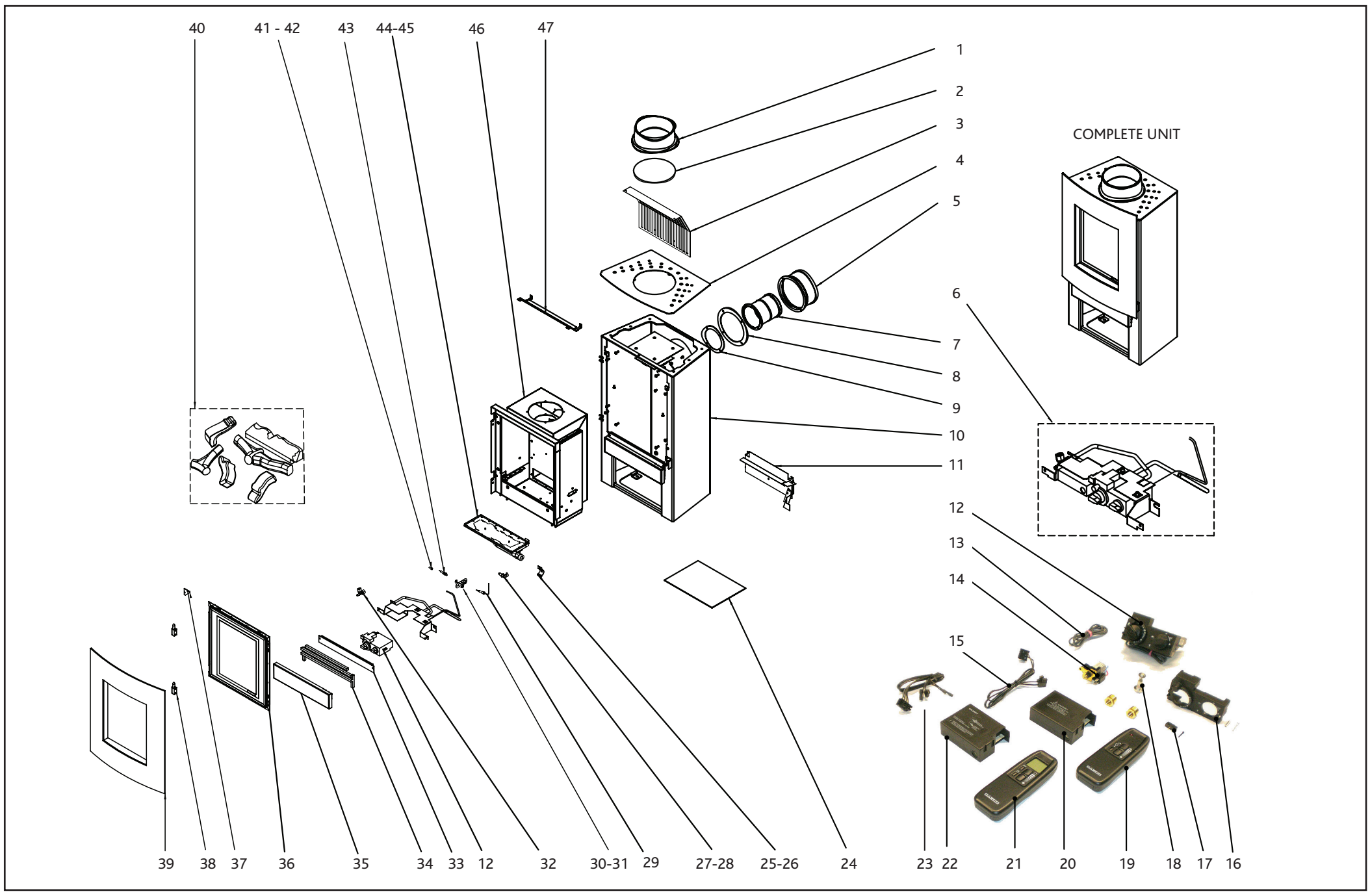

Ref. No.	Product Code	Description	Quantity
1	**8548**	BALANCED FLUE CAST COLLAR	1
2	**GZ5045**	F40 AVANTI BLANKING PLATE TOP B/F	1
3	**GZ5752**	REAR INNER BAFFLE	1
4	**GZ5012**	TOP OUTER ASSY TOP PLATE	1
5	**MEC0232**	B/F OUTER SPIGOT	1
6	**GZ7026**	F40 B/F MERTIK ENGINE ASSY NG	1
7	**MEC0231**	B/F INNER SPIGOT	1
8	**CE0211**	B/F OUTER FLUE GASKET	1
9	**CE0210**	B/F INNER FLUE GASKET	1
10	**GZ5746**	OUTER CARCUSS ASSY	1
11	**GZ5723**	F40 INLET AIR BAFFLE	1
12	**GC0088**	MERTIK VALVE/COVER	1
13	**GC0090**	IGNITION LEAD G30-EZS9005	1
14	**EL0234**	GEARED MOTOR G30-EMS	1
15	**EL0237**	STD RECEIVER CABLE G30-ZRCS/350	1
16	**GC0087**	MERTIK CONTROL COVER G30-ZHN2	1
17	**EL0241**	MICRO SWITCH & SCREW G30-ZMS	1
18	**GC0092**	MAG UNIT G30-EP290/110	1
19	**EL0239**	STD BLK HANDSET G30-ZRHSO-Z26	2
20	**EL0235**	STANDARD RECEIVER G30-ZRRS	1
21	**EL0240**	THERMOSTATIC H/SET G30-ZRHTT-Z27	1
22	**EL0236**	THERMOSTAT RECEIVER G30-ZRRT	1
23	**EL0238**	THERMO RECV CABLE G30-ZRCT/350	1
24	**GZ7115**	F40 AVANTI B/F MERTIK INSTRUCTIONS & FIXING KIT	KIT
25	**GZ3869**	AERATION PLATE LPG	1
26	**GZ2016**	AERATION PLATE NG	1
27	**IN0053**	MAIN INJECTOR 1.7 NG	1
28	**IN0062**	ELBOW INJECTOR F40 LPG	1
29	**PI0010**	THERMOCOUPLE 0.290.150	1
30	**PI0051**	PILOT BURNER BODY	1
31	**PI0052**	PILOT BURNER GASKET	1
32	**IN0009**	8MM PRESSURE TEST ELBOW	1
33	**GZ6994**	F40 FRONT FASCIA PLATE B/F	1
34	**GZ5059**	F40 AVANTI FRONT COAL RETAINER	1
35	**GZ4994**	F40 CONTROL COVER ASSY	1
36	**GZ5289**	F40 B/F GLASS FRAME ASSY	1
37	**GZ2005**	CASSETTE GLASS FRAME TABS	1

Ref. No.	Product Code	Description	Quantity
38	**FA0453**	F40 AVANTI SOUTHCO 96-50-500-50	2/1000
39	**GZ5008**	F40 AVANTI DOOR ASSY	1
40	**CE0565**	MIDI B/F STOVE LOG SET	1
41	**PI0015**	INJ 19 HOOKJET (LPG)	1
42	**PI0026**	INJ 27 HOOKJET 0977113 (NG)	1
43	**PI0053**	E90 DEGREE ELECTRODE	1
44	**GZ5510**	BURNER UNIT LPG	1
45	**GZ5501**	BURNER UNIT NG	1
46	**GZ5031**	B/F F40 FIREBOX	1
47	**GZ4966**	TOP INNER BAFFLE	1