Riva 67 Arlington Decorative Front Installation & User Instructions

For use with the Gas and Electric Riva 67

PR0786 Issue 4 (October 2006)

Covering the following frames
8661B - Arlington Matt Black (GAS)
8661BEL - Arlington Matt Black (ELECTRIC)

1. GENERAL

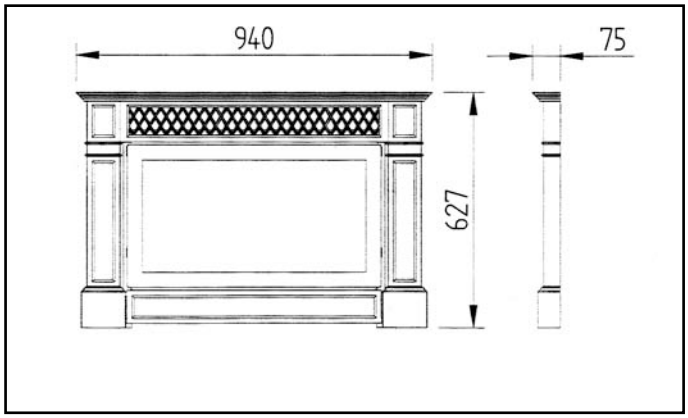

1.1 These instructions are supplemental to, and must be read in conjunction with, the installation instructions supplied with the appliance. Read both thoroughly before installing the appliance.

1.2 Fitting of this decorative front should be carried out after the appliance has been installed but before any commissioning tests that may be required.

2. DEFLECTOR ASSEMBLY FOR RIVA 67 ELECTRIC (8590ELR) ONLY

For the Electric Riva (8590ELR) refer to Installation Instruction (PR695):

FOR THE SLIMLINE ELECTRIC RIVA (8590SLELR) REFER TO PR0851 AND THEN RETURN TO SECTION 3 OF THIS INSTRUCTION.

2.1 Fit the deflector as described below before fixing the appliance box in place. To assemble the deflector frame:

a) Use the four No. 8 x 10 self tapping screws, as shown in Fig.1.

1

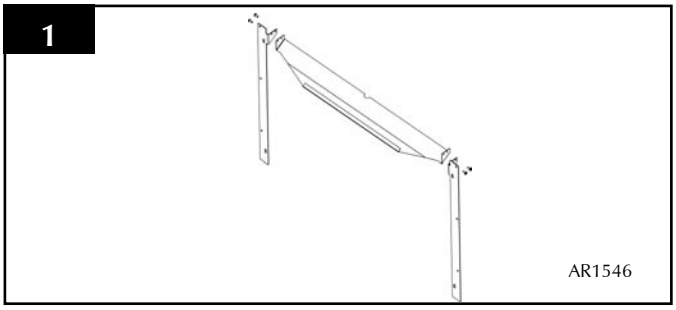

b) Choose out of 2 ways to fix the firebox to the wall, depending on the construction of the wall:

1. Use the fire's wall-fixing screws through the deflector and firebox holes into the wall plugs, (refer to the Installation Instructions - Electric Riva 67), or

2. Slide the panel clips over the fire fixing holes (Fig. 2, Detail A) and fix the deflector assembly with 4 X No. 10 s/t screws.

2

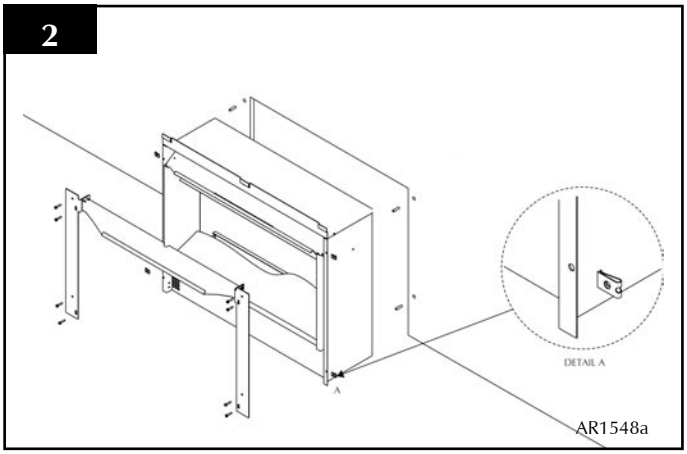

NOTE: If you use method 2. above you may need to make a small recess in your plaster for your Riva electric to sit flush with the wall, (Fig. 3)

3

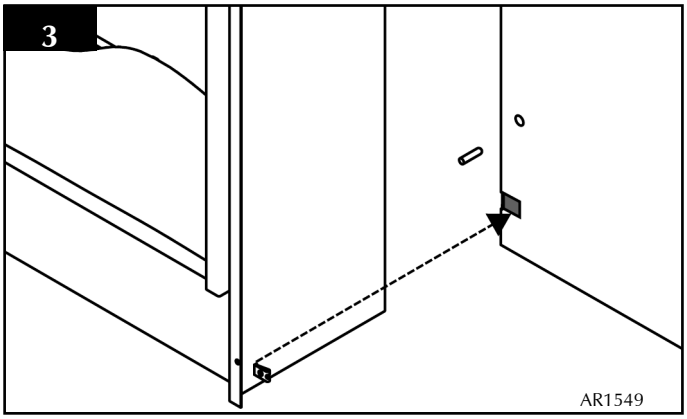

c) Slide the assembled deflector onto the fire.

The holes on the inside of each 'leg' align with the box fixing holes. The angled deflector rests on top of the appliance's hood (Fig. 4).

4

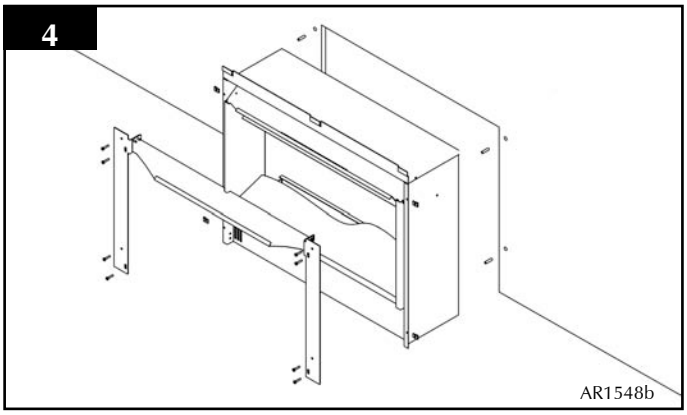

NOTE: The bottom holes on the appliance box will need to be marked and drilled using a 4mm diameter drill through the bottom deflector holes. If necessary, the bar between the two slots directly behind the hinge will need to be removed to avoid any interference with the hinge bar attached to the casting door.) See diagram 5.

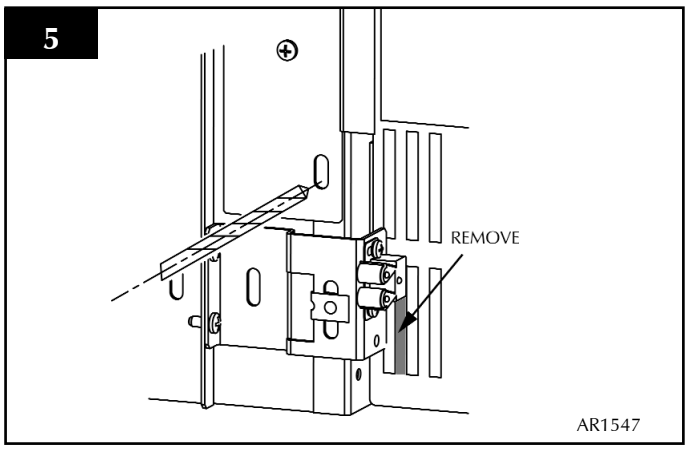

The assembly can then be fixed firmly to the wall through the outer deflector holes and into the wall fixing plugs.

3. FITTING

IMP**ORTANT: BEFORE PROCEEDING WITH THE INSTALLATION OF THE DECORATIVE FRONT, YOU MUST ENSURE THAT THE WALL AREA ABOVE AND TO THE SIDES OF THE APPLIANCE IS SUITABLY CONSTRUCTED TO ENSURE THE FIXINGS WILL CARRY THE WEIGHT OF THE FRONT. IF THE WALL IS CONSTRUCTED FROM PLASTERBOARD OR SIMILAR, IT IS ESSENTIAL THAT BATTERNS ARE LOCATED TO THE SIDES OF THE APPLIANCE IN THE FIXING AREA TO PROVIDE STRENGTH TO THE FIXINGS. SEE DIAGRAM 6.**

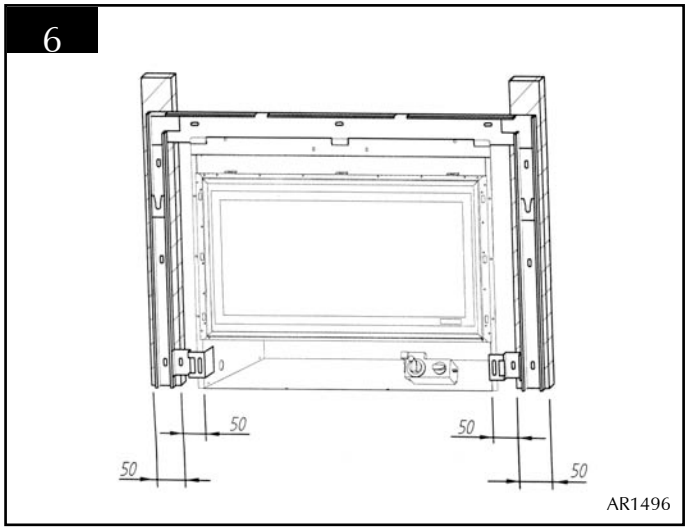

3.1 Having completed the installation of the Riva 67 by referring to the installation instructions, locate the 3 lugs on the top flange. See diagram 7.

3.2 Locate the wall mounting bracket so that the tabs locate in the lugs on the top flange and the bracket rests against the top edge of the top flange, ensure the bracket is resting centrally and mark the location of the fixing holes. If the wall is of solid construction, mark the position of the 9 holes

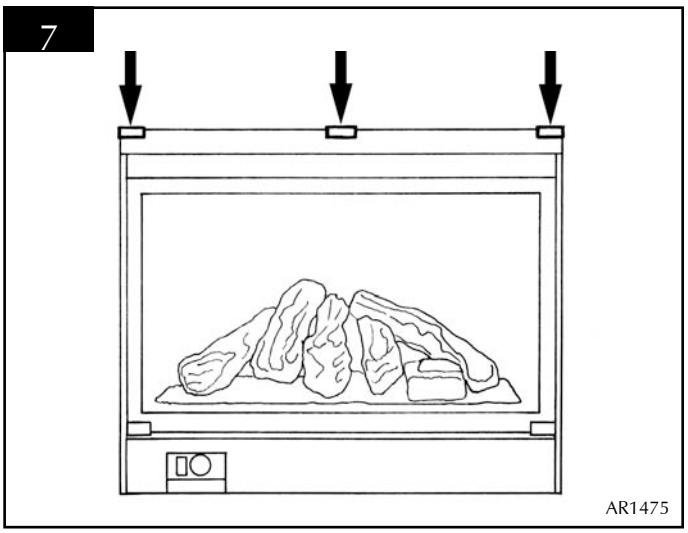

indicated "A". If the wall is constructed from studwork and plasterboard (or similar), mark the position of the 8 holes indicated "B". See diagram 8.

3.3 Remove the mounting bracket and drill the fixing holes, (making sure the debris does not fall into the fire) and push the rawlplugs into the holes, securing the bracket to the wall with the screws supplied.

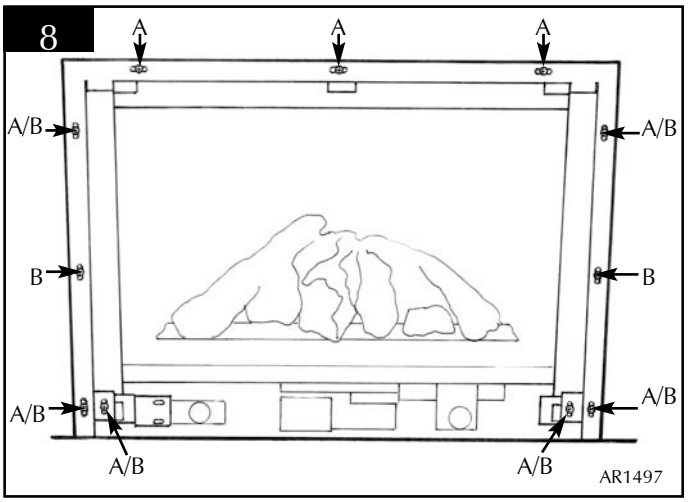

THE FIXINGS SUPPLIED SHOULD BE SUFFICIENT WHEN MOUNTING ONTO A BRICK OR BLOCK WALL, YOU SHOULD HOWEVER, USE SUITABLE FIXINGS WHEN MOUNTING ON A WALL CONSTRUCTED OF AN ALTERNATIVE MATERIAL.

3.4 Remove the black steel decorative cover plate from the packaging and locate over the top rail of the mounting frame ensuring the 2 tabs locate in the slots on the top rail. Secure to the mounting frame by inserting the 2 short pozidriv screws into the holes on the LH and RH side of the cover-plate and tightening into the holes on the mounting frame. See diagram 9.

9

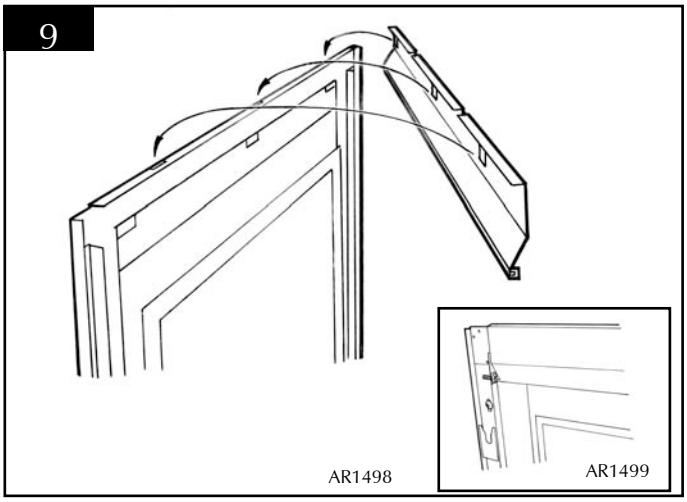

3.5 Remove the cast iron decorative front from the packaging and rest on a soft surface so that the front face points downward, a piece of cardboard from the packaging would be ideal for providing protection. Using the 2 countersunk 8mm screws from the fixing kit, locate these in the threaded holes on either side of the back face of the casting and screw into the holes until approx. 10mm of screw is left protruding. See diagram 10.

10

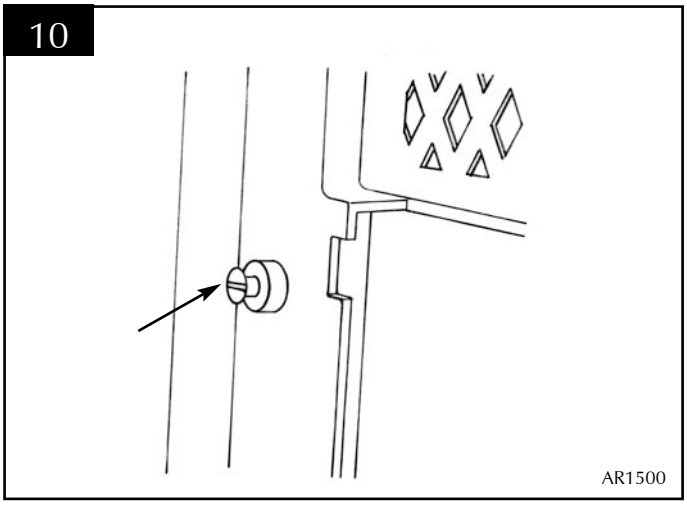

3.6 Lift the cast iron front into its upright position, raise off the floor and place over the mounting frame, ensure the front is central to the appliance and gently lower so that the 2 countersunk screws locate into the slots on the sides of the mounting bracket, the front should now be sitting on the hearth. See diagram 11.

11

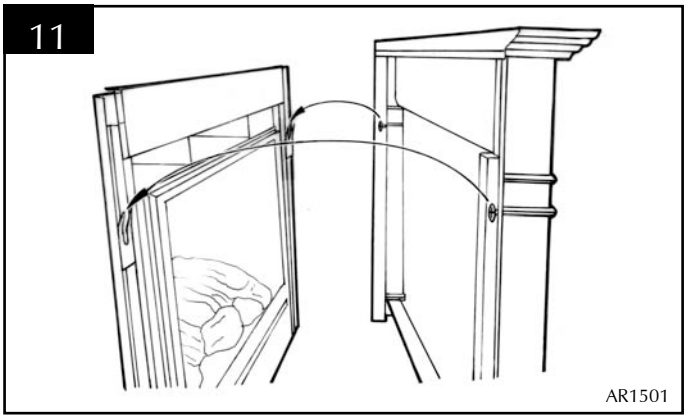

IMPORTANT: THIS DECORATIVE FRONT IS INTENDED FOR INSTALLATION AGAINST A FLAT WALL AND MUST REST ON A SUITABLY CONSTRUCTED HEARTH; IT IS TOO HEAVY FOR WALL MOUNTING WITHOUT HEARTH SUPPORT.

3.7 Carefully open the lower control access door on the front and lower until it rests against the hearth. Secure the front to the mounting frame using the 2 long black pozidriv screws and locate these in the Left and Right hand slots. Tighten until the front is secure. See diagram 12.

12

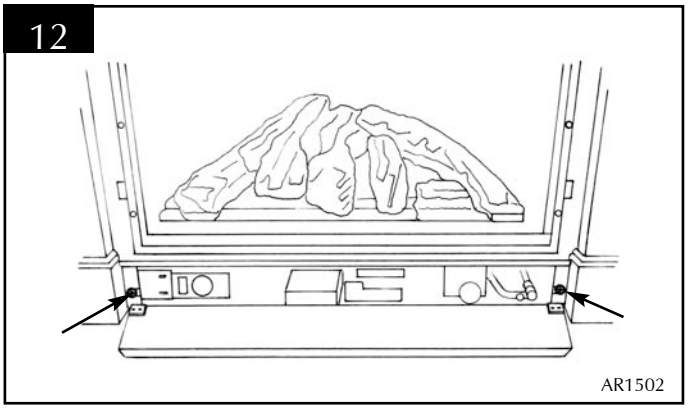

3.8 Identify the lower control door catch mechanism and pull the holding plate out of the catch. Locate the plate so that the 2 holes align with the threaded holes on the back side of the lower control door and secure in position using the two small slotted head screws. See diagram13.

13

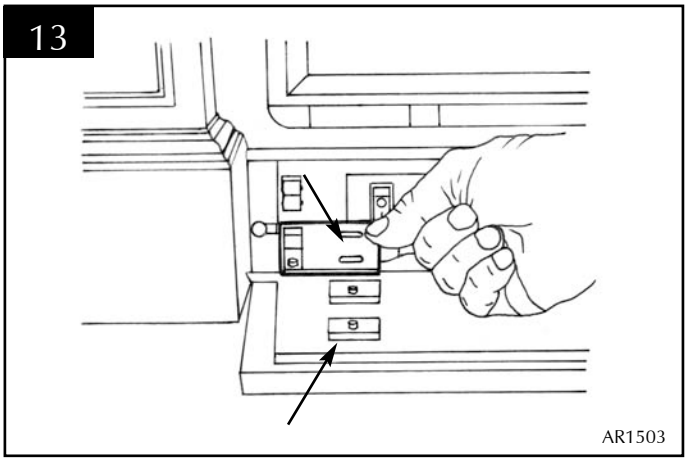

3.9 Carefully shut the lower control access door, remove the black painted steel window frame cover from the packaging and place this in position by ensuring the 4 hooks (2 on each side of the cover) locate into the 4 slots on the inner opening of the cast iron front. Push the cover down until the hooks are engaged fully behind the cast iron. See diagram 14.

14

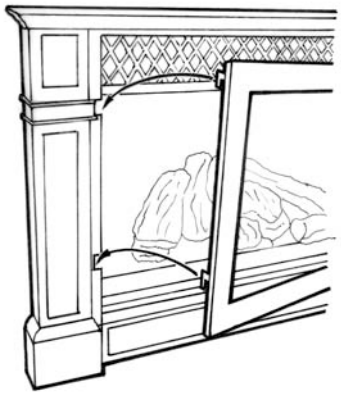

AR1504

PLEASE NOTE THAT THE CAST IRON FRONT IS VERY HEAVY, IT IS ADVISABLE THAT 2 PEOPLE ARE PRESENT TO LIFT THE FRONT INTO POSITION. EXTREME CARE SHOULD BE TAKEN TO ENSURE THE FRONT DOES NOT MARK THE WALL FINISHING.

4. COMMISSIONING

4.1 Where commissioning tests are detailed in the appliance installation instructions, these should now be carried out with the decorative frame in place.

4.2 Ensure that these instructions along with the appliance

5. OPERATION

instructions are handed to the user.

5.1 To open the lower control access door, gently pull towards you to release the catch then lower until the retention lever takes the weight.

PLEASE NOTE THAT THE LOWER ACCESS DOOR IS MADE OF CAST IRON AND IS THEREFORE QUITE HEAVY, ALTHOUGH THE RETENTION LEVER WILL TAKE THE WEIGHT IT MAY STILL BE POSSIBLE TO TRAP FINGERS IF CARE IS NOT TAKEN.

5.2 To close the lower control access door, return to the upright position ensuring the catch engages.

PLEASE NOTE THAT SOME RESISTANCE FROM THE CATCH IS NORMAL DURING THE OPENING AND

6. CLEANNG THE FRAME

CLOSING OF THE DOOR. THIS IS NECESSARY TO SUPPORT THE WEIGHT OF THE DOOR.

6.1 Only clean the frame when the appliance is cold.

6.2 It is advisable to run a soft brush over the cast iron front to remove any dust that may have accumulated. A damp cloth may be used but care should be taken to ensure no residue or lint from the cloth is left behind.

7. FIXING KIT COMPONENTS

COMP NO.	DESCRIPTION	QUANTITY
FA0415	WOODSCREWS	13
FA0387	RAWLPLUGS	13
FA0016	SHORT POZIDRIV	2
FA0198	LONG POZIDRIV	2
PR0695	INSTRUCTION MANUAL	1
FA0041	PANEL CLIPS	4
FA0016	NO.8 X 10 S/T SCREW	4
FA0348	CSK SCREW	2
FA0070	SLOTTED SCREW	2
FA0468	NO. 10 X 3/8" SCREW	4

Gazco Limited, Osprey Road, Sowton Industrial Estate, Exeter, Devon, England EX2 7JG
Tel: (01392) 261999 Fax: (01392) 444148 E-mail: info@gazco.com

A member of the Stovax Group