STOVAX

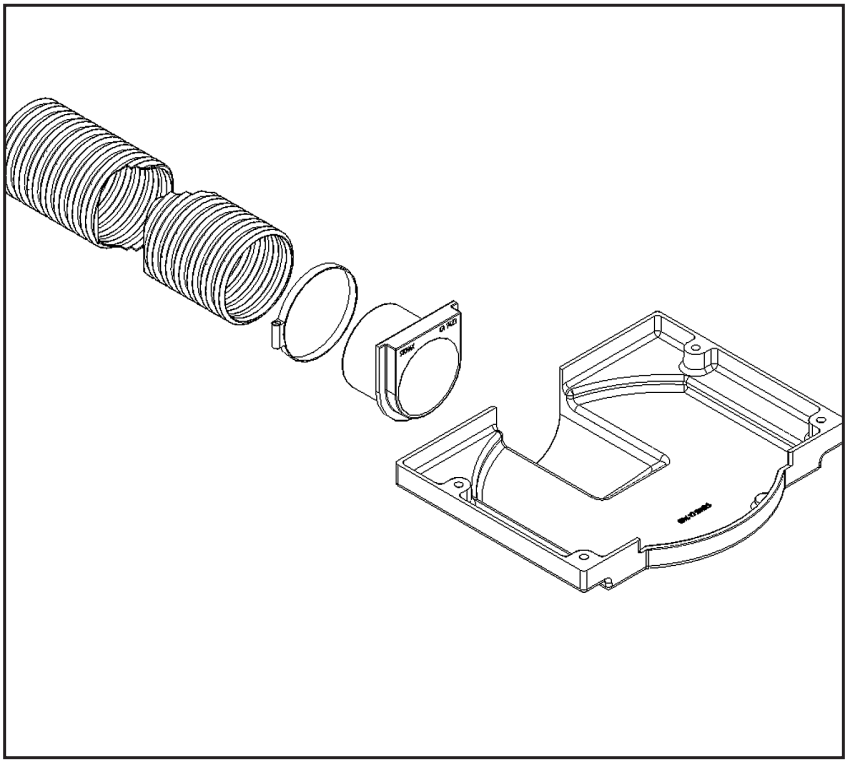

Riva Plus Outside Air Kit

Riva Plus Small, Midi, Medium & Large

Installation & Users Instructions

For use in GB, IE (Great Britain and Eire)

CE

This appliance has been certified for use in countries other than those stated. To install this appliance in these countries, it is essential to obtain the translated instructions and in some cases the appliance will require modification. Contact Stovax for further information.

IMPORTANT

Please read these instructions carefully and in conjunction with the appropriate Riva Installation and User instructions.
Care must be taken when handling the stove to avoid injury or damage to the stove.

They will be needed when maintenance or servicing is required.

PM248 -Issue 2 (November 2009)

COVERING THE FOLLOWING MODELS:

Appliance	Kit Part No.	Colour
Riva Plus Small	RVP0001	Black
Riva Plus Midi	RVP0002	Black
Riva Plus Medium	RVP0003	Black
Riva Plus Large	RVP0004	Black

INSTALLATION REQUIREMENTS **3**

General 3
Packing list 3
Tool required 4

INSTALLATION INSTRUCTIONS 4

Fixing kit to the appliance 4
Internal positioning of the air duct 5
External termination of the air duct 8

COMMISSIONING **5**

MAINTENANCE **5**

This appliance has been approved by HETAS Ltd.

INSTALLATION REQUIREMENTS

GENERAL

This Air Duct system should be fitted and installed in accordance with these instructions.

PACKING LIST

1 x Outer air chamber casting
1 x Connection/Adapter casting (Small & Midi Riva Plus - 3" dia/Medium & Large Riva Plus - 4" dia)
4 x M10 x 16 Cap Head Screws
1 x M6 x 10 Hex Head Screw
1 x Air duct (Small & Midi Riva Plus - 3" dia/Medium Large Riva Plus - 4" dia)
1 x Fixing band

1

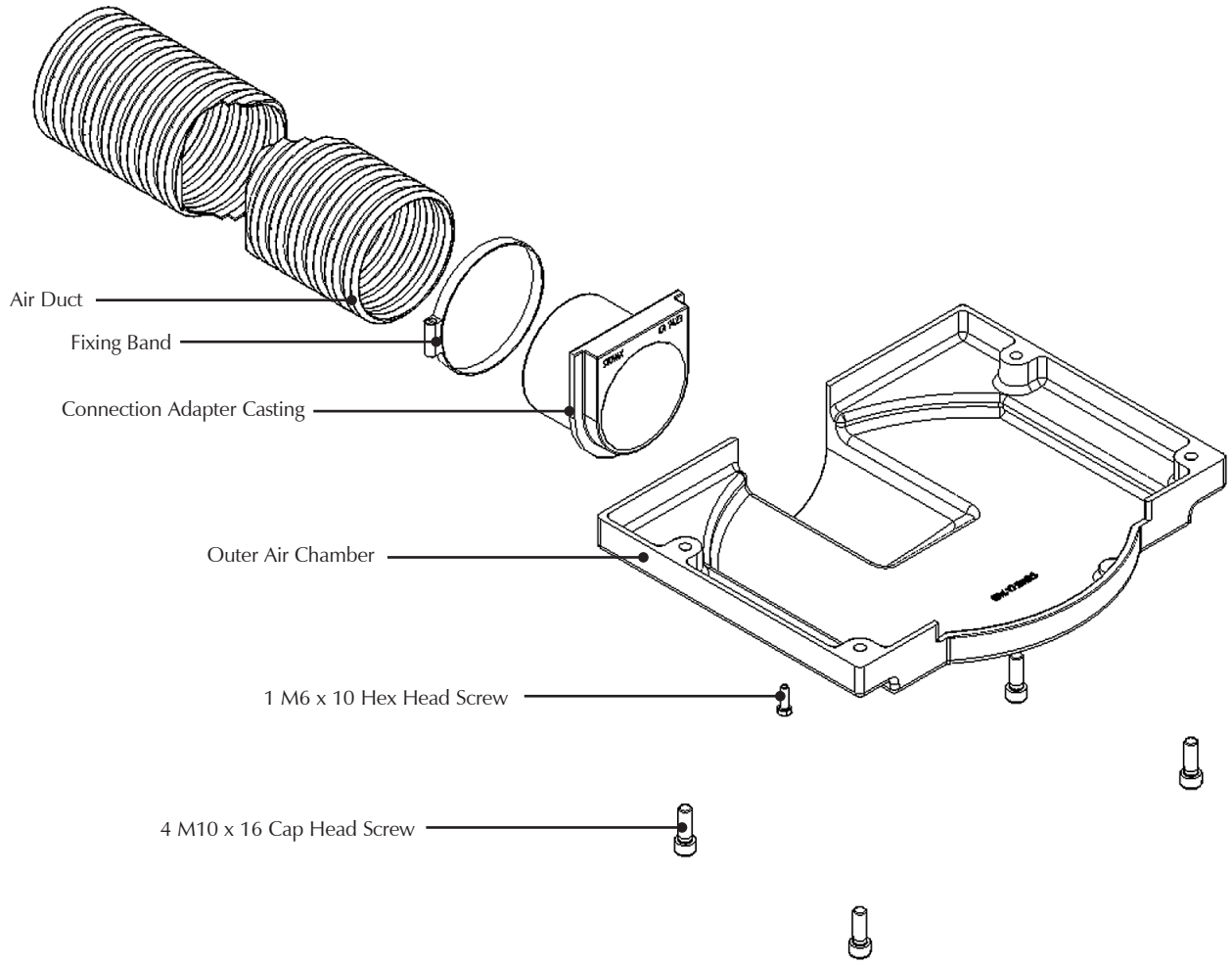

PR8165

INSTALLATION INSTRUCTIONS

1. FIXING KIT TO APPLIANCE

1.1 • Fix outer air chamber casting to underside of stove base using 4 M10 x 16 cap head screws

• Fix connection/adapter casting using 1 M6 x 10 hex head screw

• Fix hose to connection/adapter casting and secure duct with fixing band

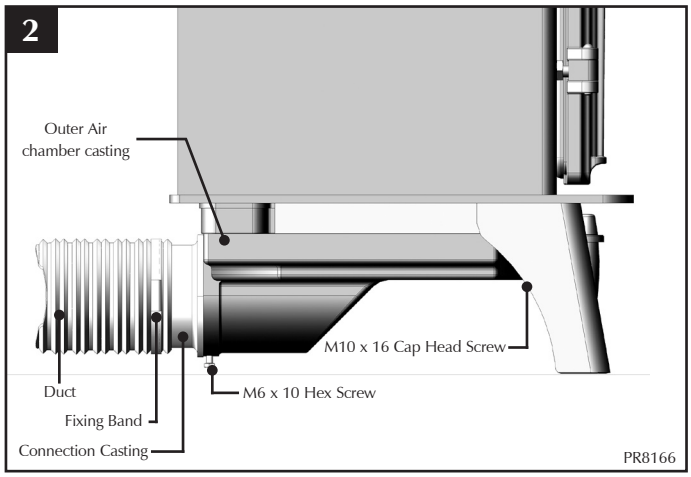

2. INTERNAL POSITIONING OF THE AIR DUCT

2.1 The air duct must not touch any combustible materials within 300mm (Small & Midi Riva Plus)/500mm (Medium & Large Riva Plus) of the back of the stove, *diagram 3*

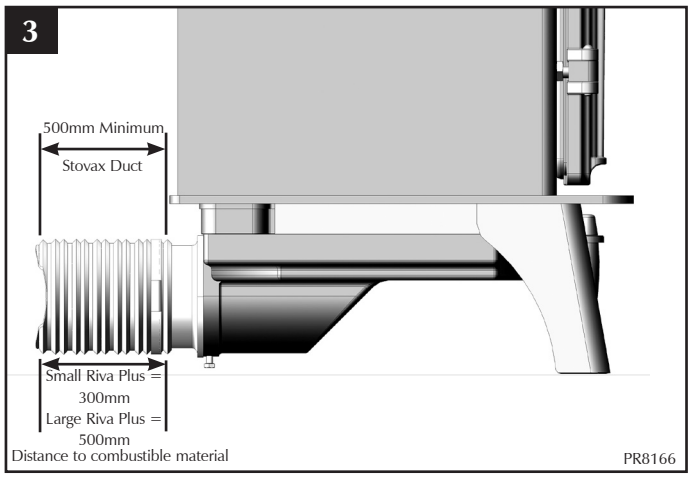

2.2 Only use Stovax non combustible ducting supplied with the connection kit within 500mm of the air duct connection.

2.3 Take care when routing the duct to ensure it is not deformed and restricting the airflow.

3. EXTERNAL TERMINATION OF THE AIR DUCT

3.1 If the air duct is to terminate on an external wall it is advisable to terminate the air ducting in 2 positions to minimise the effect of variations in external air pressures, *diagram 4*

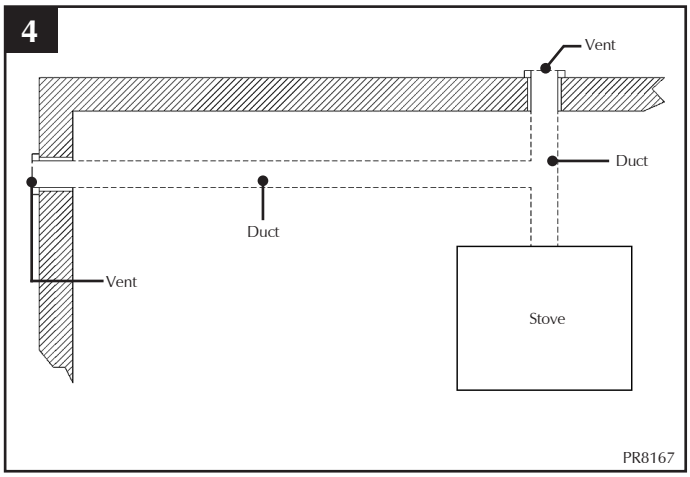

3.2 If the building has a suspended floor, which has external ventilation into the void below the termination may be made into this area.

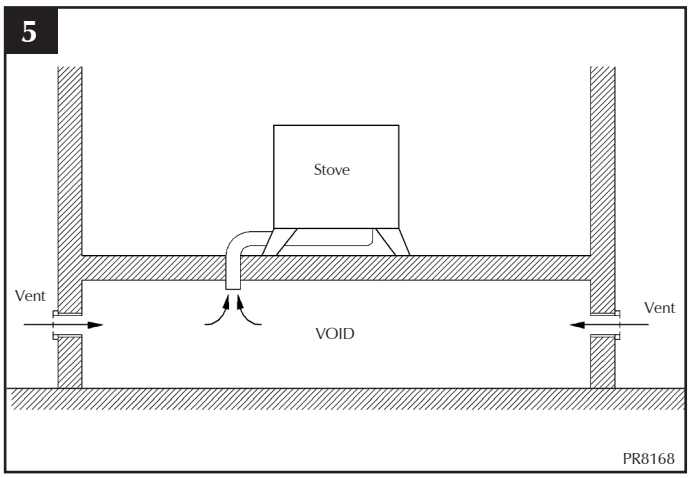

3.3 Terminations should be made with a proprietary fixed open external air vent kit, which gives minimum free area of greater than listed, positioned so no blockage can occur and not permit the entry of birds or animals.

3.4 Under normal circumstances the Small Riva Plus (5kW) requires no additional air supply. If the product is fitted in a well sealed home it may require additional ventilation to enable the product to work effectively. This could be achieved by the fitting of the external air kit.

INSTALLATION INSTRUCTIONS

3.5 The free area of the external vents is:

	Small & Midi Riva Plus Ø80mm	Medium & Large Riva Plus Ø100mm
mm^2	5027	7855
cm^2	50.3	78.6
in^2	7.8	12.2

4. COMMISSIONING AND TROUBLESHOOTING

4.1 Complete the appliance commissioning procedure as required on installation of the kit.

4.2 If the kit is fitted to a previously installed stove the commissioning procedure should be repeated prior to re-using the product, with particular regard to checking for spillage of combustion products.

4.3 If excess spillage is noted consideration should be given to the position of the external vent terminations as a vent positioned in a negative area could reduce the effective flue draught.

4.4 In extreme cases of negative external pressure products of combustion may be drawn into the air duct (reverse flow), therefore it is essential to maintain the clearances to combustible materials as stated.

4.5 Cases of reverse flow can be identified by the existence of soot or staining in the outer air chamber and duct near the underside of the stove.

4.6 If excess spillage is noticed air ducts and vents should be checked for any obstructions.

5. MAINTENANCE

5.1 Check internal and external vents and air ducts at least once a year for any obstructions.

4.2 Check the security of air connections to the stove and tighten if required.

STOVAX

Stovax Ltd, Falcon Road, Sowton Industrial Estate, Exeter, Devon, England EX2 7LF
Tel: **(01392) 474011** Fax: **(01392) 219932** E-mail: **info@stovax.com** **www.stovax.com**