(P)8596 RIVA 53 CONVENTIONAL FLUE - DRIFTWOOD

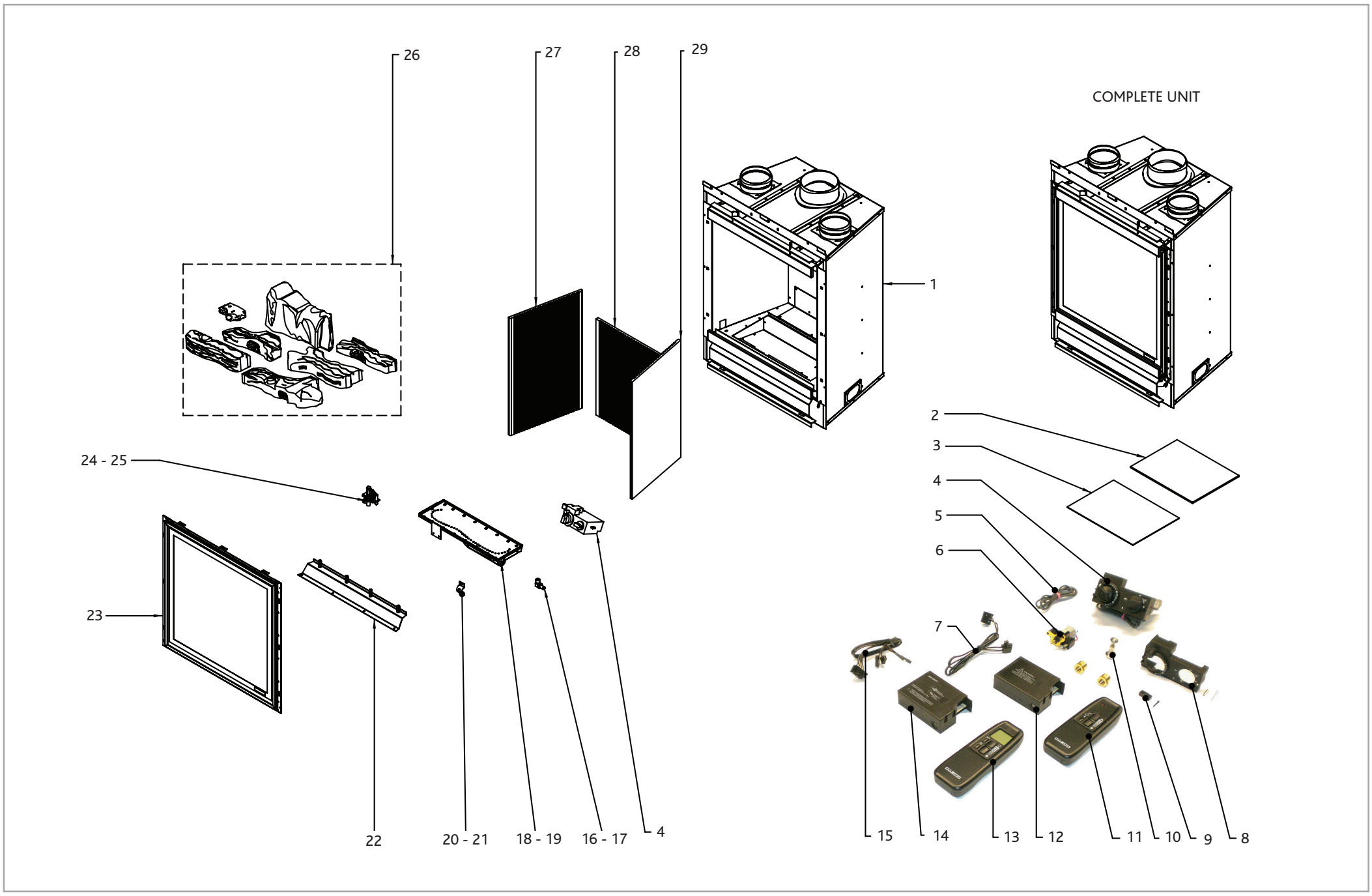

Ref. No.	Product Code	Description	Quantity
1	**GZ4290**	MAIN HOUSING ASSEMBLY	1
2	**CE0423**	RIVA 53 GRANULE PACK	1
3	**GZ3677**	RIVA 53/67 BVENT INSTRUCTION & FIXING KIT	KIT
4	**GC0088K**	MERTIK VALVE GV36-C1A0AKL-18L	1
5	**GC0090**	LEAD REMOTE	1
6	**EL0234**	GEARED MOTOR G30-EMS	1
7	**EL0237**	STANDARD RECV CABLE G30-ZRCS/350	1
8	**GC0087**	MERTIK CONTROL COVER G30-ZHN2	1
9	**EL0241**	MICRO SWITCH & SCREW G30-ZMS	1
10	**GC0092**	MAG UNIT G30-EP290/110	1
11	**EL0239**	STD BLK HANDSET G30-ZRHSO-Z26	1
12	**EL0235**	STANDARD RECEIVER G30-ZRRS	1
13	**EL0240**	THERMOSTATIC H/SET G30-ZRHTT-Z27	1
14	**EL0236**	THERMOSTAT RECEIVER G30-ZRRT	1
15	**EL0238**	THERMOSTAT RECV CABLE G30ZRCT/350	1
16	**IN0040**	185 SINGLE HOLE INJECTOR	1
17	**IN0028**	390 ELBOW INJECTOR	1
18	**GZ4322**	BURNER UNIT ASSY NG	1
19	**GZ4321**	BURNER UNIT ASSY LPG	1
20	**GZ4333**	AERATION PLATE LPG	1
21	**GZ3966**	AERATION PLATE NG	1
22	**GZ3985**	FRONT AERATION BAFFLE	1
23	**GZ4310**	RIVA 53 BVENT WINDOW FRAME ASSY	1
24	**PI0044**	9066-NG-OXYPILOT (600mm LEAD)	1

Ref. No.	Product Code	Description	Quantity
25	**PI0045**	9247-LPG-OXYPILOT (600mm LEAD)	1
26	**CE0415**	RIVA 53 CASSETTE CERAMIC LOG SET	SET
27	**CE0450**	RIVA 53 BVENT SIDE PANEL (BLK REED) RH	1
28	**CE0385**	RIVA 53 REAR CERAMIC PANEL (BLK REED)	1
29	**CE0450**	RIVA 53 BVENT SIDE PANEL (BLK REED) LH	1