(P)8704BFLEC STUDIO 22 BALANCED FLUE - LOGS *SERIAL NO. from 20,000*

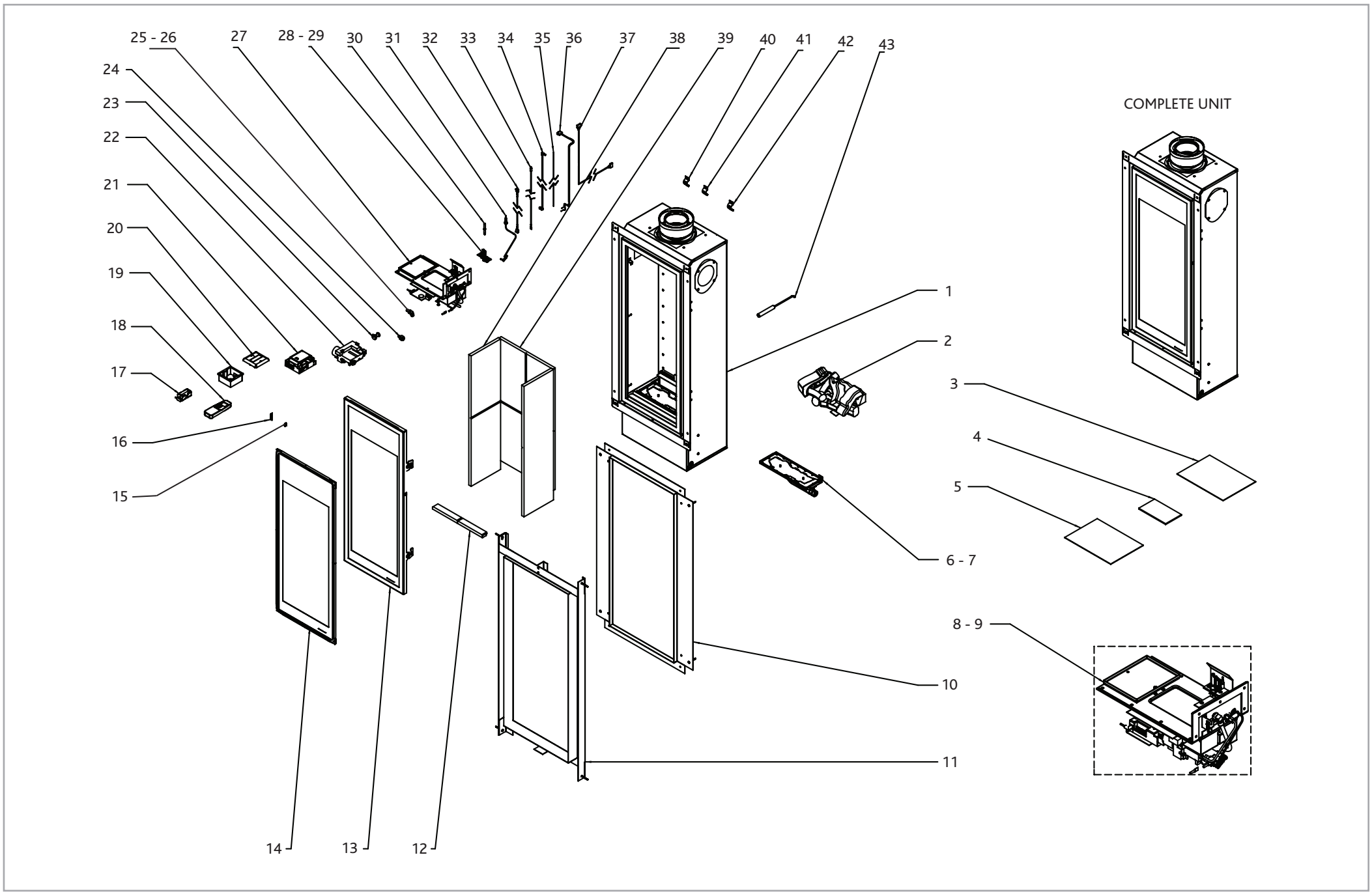

Ref. No.	Product Code	Description	Quantity
1	**GZ7192**	MAIN HOUSING ASSY	1
2	**CE0720**	STUDIO 22 B/F LOG SET	1
3	**GZ6567**	GENERAL FIXING KIT	KIT
4	**CE0267**	EMBER PACK	1
5	**GZ7482**	INSTRUCTIONS & FIXING KIT	KIT
6	**GZ7467**	STUDIO 22 B/F LOG BURNER ASSY NG	1
7	**GZ7468**	STUDIO 22 B/F LOG BURNER ASSY LPG	1
8	**GZ7152P**	ENGINE ASSY LPG	1
9	**GZ7152N**	ENGINE ASSY NG	1
10	**8727BFEK22**	STUDIO 22 BF EDGE INSTALLATION	KIT
11	**8727BFCW22**	STUDIO 22 BF COOL WALL INSTALLATION	KIT
12	**CE0695**	STUDIO 22 B/F FRONT PANEL	2
13	**GZ7162**	PORTRAIT LOG B/F DOOR ASSY	KIT
14	**GZ8007**	STUDIO 22 GLASS/ROPE SEAL ASSY	1
15	**FA0523**	BLK STEEL EDGE CLIP REF ECD/1622	2
16	**GZ6361**	STUDIO B/F GLASS CLIP BRACKET	2
17	**EL0410**	BATTERY HOLDER 4xAA S/CELL	1
18	**GC0149**	THERMOSTATIC HANDSET G6R-H4T-GA	1
19	**EL0409**	WALL BOX	1
20	**GC0164**	TOUCHPAD/WALL PLATE FASCIA ASSY	1
21	**GC0150**	GV60 RF NEW RECEIVER G6R-R4AN-Z9	1
22	**GC0123**	GAS COMB CONTROL GV60M1-C1A5K1L	1
23	**GC0092**	MERTIK MAG UNIT G30-EP290/110	1
24	**GC0124**	T/C CURRENT INTERRUPTER G60-ZUF9	1
25	**IN0051**	ELBOW INJECTOR 200	1
26	**IN0029**	530 ELBOW INJECTOR	1
27	**GZ7160**	CONTROL COVER ASSY	1
28	**PI0070**	LINEA PILOT BURNER LPG B/TK	1
29	**PI0069**	LINEA PILOT BURNET B/TEK NG	1
30	**PI0075**	E-BOX B/F ELECTRODE BT00918	1

Ref. No.	Product Code	Description	Quantity
31	**PI0074**	E-BOX B/F THERMOCOUPLE (701042)	1
32	**GC0144**	CABLE WALL SWITCH LEAD G6R	1
33	**GC0126**	THERMO CURRENT CABLE G60-ZKIRF/350	1
34	**GC0127**	CABLE FOR BATTERY G60-ZCB90/1200	1
35	**GC0125**	IGNITION CABLE G60-ZKI6/500	1
36	**GC0128**	SWITCH WITH CABLE G60-ZSKLF/500	1
37	**GC0133**	350MM CONNECTION CABLE G6R-C3	1
38	**CE0693**	STUDIO 22 B/F SIDE PANEL	2
39	**CE0694**	STUDIO 22 B/F BACK PANEL	1
40	**GZ3269**	AERATION PLATE	1
41	**GZ3869**	AERATION ADJUSTER G25	1
42	**GZ2016**	AERATION PLATE CASSETTE	1
43	**GZ6690**	STUDIO DOOR TOOL	1