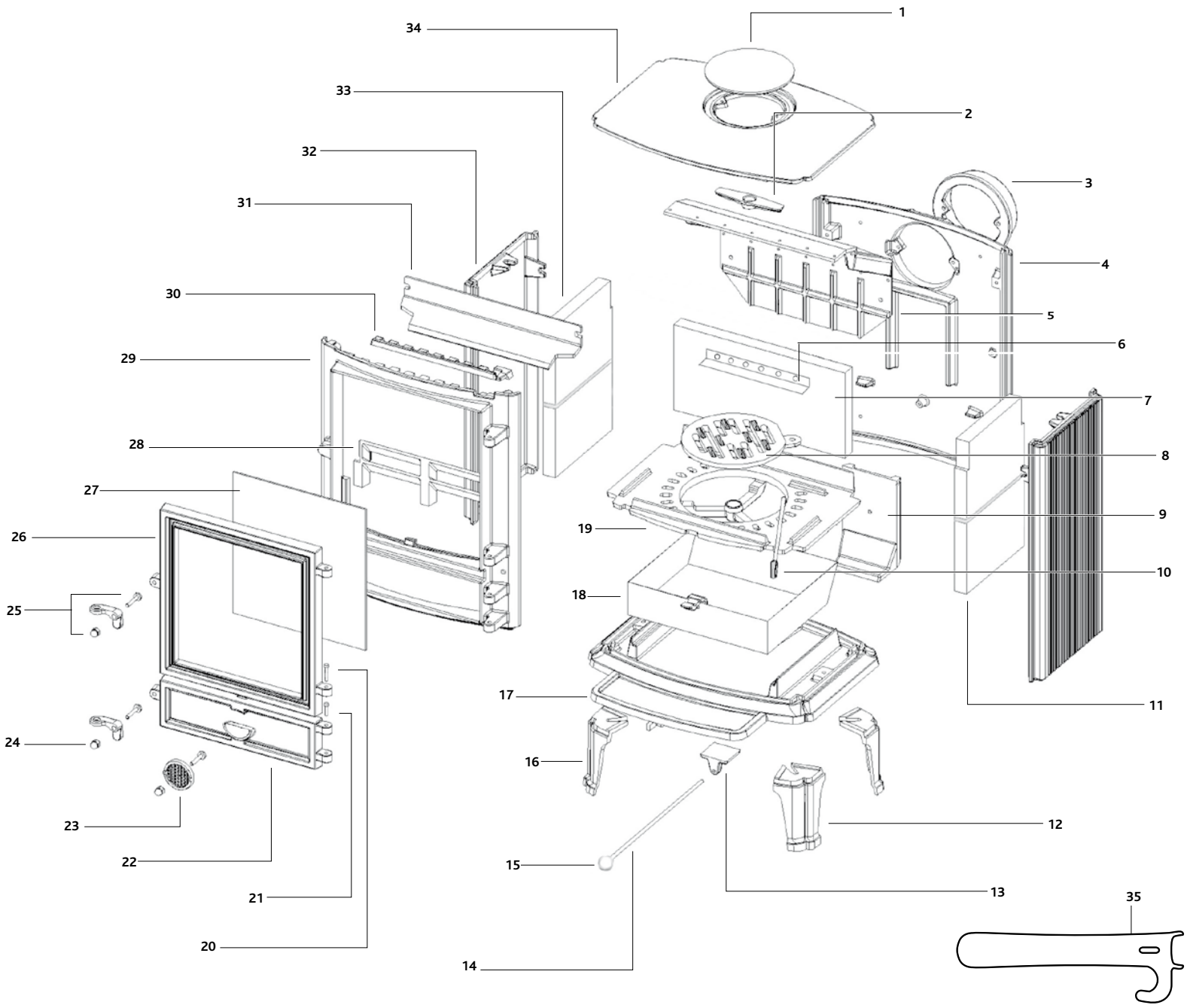

Ref. No.	Product Code	Description	Casting No.
1	**BR6**	Blanking plate	LB7000/173BR12
2	**BR53**	Blanking plate clamp	LB7000/176
3	**LBR174**	Flue adaptor	LBR174
4	**LBR15**	Back plate	LBR15
5	**LBR65**	Clean burn chamber, complete	
6	**LBR60**	Rear brick retainer	
7	**LBR3**	Rear brick	
8	**BR52**	Circular riddling grate	LB7000/48
9	**LBR66**	Clean burn cover	LBR66
10	**LBR20**	Riddling device	
11	**LBR2**	Bottom side brick	
12	**LBR68**	Leg, front right & rear left	
N/A	**BR37**	Long leg, front right & rear left	LB7000/010
13	**LBR67**	Secondary air control slider	LBR67
14	**LBR70**	Secondary air control rod	
15	**LBR71**	Knob for secondary air control rod	
16	**LBR69**	Leg, front left & rear right	
N/A	**BR38**	Long leg, front left & rear right	LB7000/020
17	**LBR35**	Base plate, with ashlip	LBR35
18	**LBR5**	Ashpan	
19	**LBR19**	Grate base plate	LBR19
20	**BR48**	Door pin	
21	**BR47**	Ashpan door pin	
22	**LBR59**	Ashpan door	LBR59
23	**LBR64**	Draught adjuster	
24	**BR23**	Brass nut	
25	**BR51**	Door catch assembly	LB7000/500
26	**LBR42**	Door frame	LBR42
N/A	**LBR58**	Door, complete	
27†	**GL0097†**	Door glass †	
28	**LBR11**	Log retainer	LBR11
29	**LBR55**	Front plate	LBR55
30	**LBR63**	Top air inlet control mechanism	LBR63
31	**LBR62**	Air wash plate	LBR62
32	**LBR54**	Side plate	LBR54
33	**LBR1**	Top side brick with cutouts	
34	**LBR44**	Top plate	LBR44
35	**BR22**	Implement tool	LB7000/485
N/A	**LBR61**	Screws for rear brick retainer	
N/A	**BR46**	Glass clip screw	
N/A	**BR43**	Glass clip	

† See Accessories Price List
For common fixings, please see page 36
For Rope Seal packs, please see page 37

Ref. No.	Product Code	Description	Casting No.
Coloured Enamel - Suffix part number with BL for Midnight Blue, LG for Laurel Green or IV for Ivory			
3	**LBR174****	Flue adaptor	LBR174
12	**LBR68****	Leg , front right & rear left	
N/A	**BR37****	Long leg, front right & rear left	LB7000/010
16	**LBR69****	Leg, front left & rear right	
N/A	**BR38****	Long leg, front left & rear right	LB7000/020
17	**LBR35****	Base plate, with ashlip	LBR35
22	**LBR59****	Ashpan door	LBR59
23	**LBR64****	Draught adjuster	
26	**LBR42****	Door frame	LBR42
N/A	**LBR58****	Door, complete	
29	**LBR55****	Front plate	LBR55
32	**LBR54****	Side plate	LBR54
34	**LBR44****	Top plate	LBR44