GAZCO

Electric Coal-Effect Fires with Fan Heater

Instructions for Use, Installation

For use in GB, IE (Great Britain and Eire)

IMPORTANT

THIS APPLIANCE MUST BE EARTHED

For use with 230v 50hz electric supply only.
Please read these instructions carefully before installation and keep them in a safe place; they will be needed when maintenance or servicing is required.

PR0491 Issue 3 (October 2011)

USER INSTRUCTIONS

1. GENERAL

BEFORE USING THIS APPLIANCE ANY ASH COVER (IF FITTED) MUST BE REMOVED.

1A

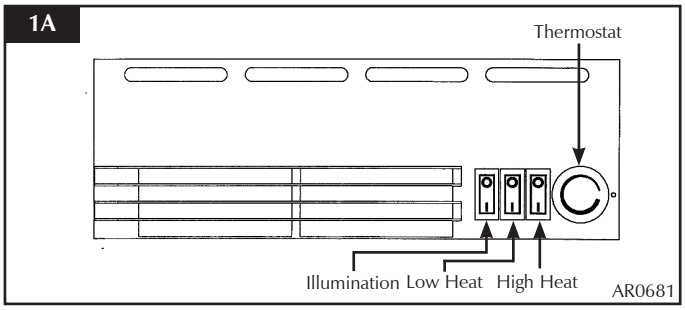

1B

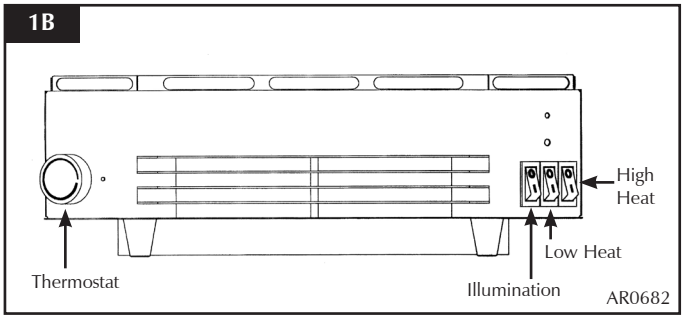

YOUR APPLIANCE IS CONTROLLED BY ONE OF THE SYSTEMS SHOWN ABOVE.

1. The glass fibre moulding may give off a slight smell when first used. This is harmless and should disappear after a day or two.

2. The appliance is fitted with a thermal safety cut-out which operates if the appliance overheats.

If this happens:

Unplug the appliance.

Allow the heater to cool for 5 minutes.

Check the air inlets/outlets for any obstruction.

Plug in and switch on the appliance.

The cut-out will reset.

The appliance should now run correctly. If this is not the case, unplug the appliance once more and have the appliance checked by a competent electrician.

2. CLEANING AND MAINTENANCE

ALWAYS UNPLUG THE APPLIANCE FROM THE MAINS SUPPLY BEFORE CLEANING OR UNDERTAKING ANY MAINTENANCE.

Coal-effect moulding - remove dust with a soft brush and/ or nozzle of a vacuum cleaner.

Plain orange moulding - remove dust with a soft brush and wipe clear with a damp cloth.

Coals (if fitted) - remove light dust with a feather duster. Alternatively, the coals can be removed and washed. Wear gloves when doing this and ensure the coals are completely dry before placing them back onto the orange moulding.

Replacing bulbs - if a bulb fails first unplug the appliance.

Remove the coal - effect moulding/ coals and orange moulding.

Replace with a new 60w 'fireglow orange' bulb.

If the spinners are dislodged during this replacement, take care to reposition them correctly.

CAUTION: the needles on which the spinners rotate are very sharp

Fan heater - clean the air inlet and outlet grills regularly with a soft cloth or the nozzle of a vacuum cleaner. Dust build-up inhibits efficient movement of the fan and may provoke the safety cut-out to engage.

INSTALLATION INSTRUCTIONS

1. GENERAL

Technical Specification	
Mains Supply	**230v 50Hz**
Power Rating	**2.12kW**
Fuse	**13 amp**
Bulbs	**2 x 60W 'Fireglow' orange bulbs**

1.1 Do not locate the appliance immediately below a fixed socket outlet.

1.2 Do not use this appliance in a bathroom, shower or swimming pool.

1.3 Do not allow the appliance to be covered or let the air inlet/outlet become obstructed; the appliance can overheat.

1.4 This product is intended to fit within a fireplace. Do not stand the appliance on a carpet. Stand on a firm, non-combustible surface which projects 250mm (10 inches) beyond the front of the appliance.

Make sure that furniture, curtains etc are positioned no closer the 1 metre.

1.5 When the appliance has been installed, the position of the plug must be accessible.

1.6 Where the electricity supply cable has to pass through a cast iron fireplace, stone surround etc., ensure suitable rubber bushes are fitted at possible wear points.

1.7 If fitted in an open fireplace, blank off the chimney to reduce the risk of a back draught which could cause the safety cut-out to operate.

1.8 If the electricity supply cable is damaged, do not use the appliance until it has been checked by a competent electrician.

2. INSTALLATION - STANDARD MODELS

2.1 Unpack the appliance:

Remove all packaging.

Read any warning labels carefully.

2.2 If this appliance was ordered to be installed in a standard Gazco or Stovax basket, it arrives with a ready-to-fit moulded coal effect.

2.3 It will either sit on its own feet or be supported by the edge of the basket (pre-assembled at Gazco).

2.4 Check that the appliance's voltage requirements are in accordance with your electricity supply. **Do not plug in/switch on at this stage.**

2.5 Place the appliance into position ensuring the plug reaches the socket. 2 meters of cable is supplied. If a greater length is needed the cable must be replaced by a competent electrician. Any grate must be removed to allow room for the heater box.

2.6 To fit the two 60w 'fireglow orange' bulbs and spinner support:

Remove the protective covers from the needles (**caution, these are very sharp**).

Place the 'spinners' on top of the needles:

— Red spinner on the left

— White on the right (see Diagram 1).

1

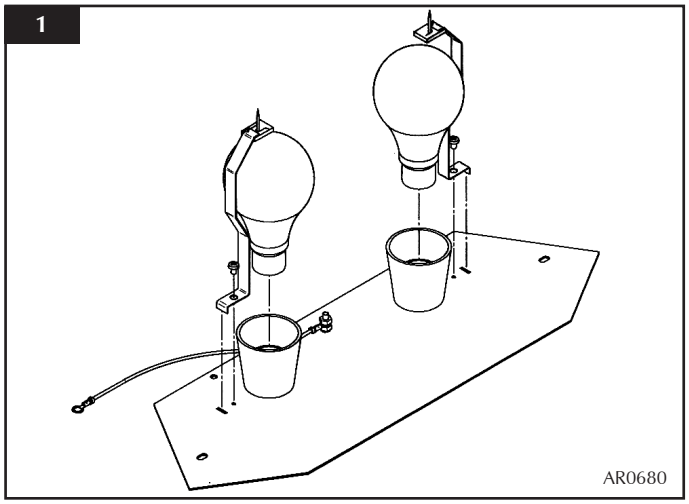

2.7 Place the specially moulded coal-effect into position on top of the fire tray, ensuring it does not prevent the spinners turning.

2.8 If supplied, place the ashpan cover into position.

2.9 Plug into the mains socket.

2.10 Before switching on, read the User Instructions.

3. INSTALLATION - MADE-TO-MEASURE MODELS

3.1 Unpack the appliance:

Remove all packaging.

Read any warning labels carefully.

3.2 If this appliance was ordered as a 'made-to-measure', it has been made to your instructions and template.

INSTALLATION INSTRUCTIONS

3.3 It will either sit on its own feet or be supported by the edge of the basket, which may need further fixing to ensure it does not move during use.

3.4 Check that the appliance's voltage requirements are in accordance with your electricity supply. **Do not plug in/ switch on at this stage.**

3.5 Place the appliance into position ensuring the plug reaches the socket. 2 meters of cable is supplied. If a greater length is needed the cable must be replaced by a competent electrician. Any grate must be removed to allow room for the heater box.

3.6 Fit the two 60w 'fireglow orange' bulbs and the spinner support:

Remove the protective covers from the needles (**caution, these are very sharp**).

Place the 'spinners' on top of the needles:

— Red spinner on the left

— White on the right (see Diagram 1, above).

3.7 Place the orange glass fibre moulding into position on top of the fire tray, ensuring that it does not prevent the spinners from turning.

3.8 Wearing gloves, arrange the coals provided to cover the moulding.

3.9 If supplied, place the ashpan cover into position.

3.10 Plug into the mains socket.

3.11 Before switching on, read the User Instructions.

5. FAULT FINDING

No illumination of effect - first check if the heater is working.

If YES, you probably need a new bulb. You can check this with a 60w table lamp bulb you know works. New bulbs are available from Gazco dealers and most electrical shops.

If NO, first change the 13 amp fuse in the plug for one which you are sure works. if the appliance still does not work, check the socket by plugging the appliance into a socket your know works. If this too fails, call a competent electrician to check the socket.

Illumination but no heat - the safety cut-out has operated to protect against overheating. See note in *User Instructions* above, in particular, ensure the air inlet and outlet grills are free of dust or any other obstruction.

6. HOW TO WIRE A PLUG

THE HEATER AND BASKET MUST BE EARTHED AT ALL TIMES

If you need to change the plug supplied with this appliance, follow the instructions below. The instructions assume that the wire has been cut

WARNING – FAILURE TO CONNECT THE WIRES CORRECTLY COULD PUT PEOPLE AT RISK FROM ELECTRIC SHOCK OR FIRE. IF IN DOUBT CONSULT A QUALIFIED ELECTRICIAN.

2 **UK Plug Supplied**

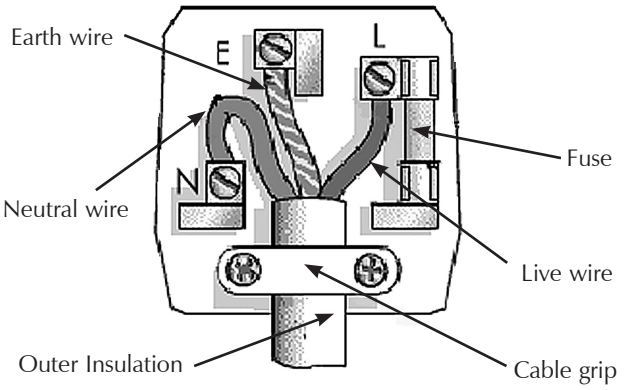

3 **Typical European Plug**

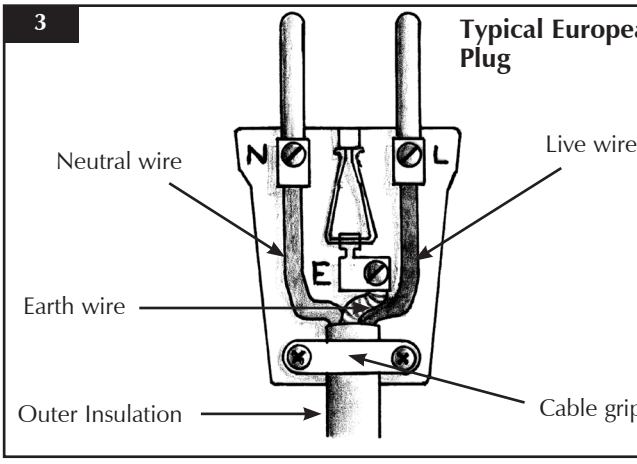

Live wire	Brown	Terminal Marked L / coloured RED
Neutral wire	Blue	Terminal Marked N / coloured BLACK
Earth wire	Green and yellow stripes	Marked E / ⏚ / colour GREEN or GREEN & YELLOW
230v 50 - 60Hz supply is required		

INSTALLATION INSTRUCTIONS

6.1 Dispose of the old plug safely.

6.2 Expose 4cm of the coloured wires.

6.3 Depending on the design of plug being used:

Trim the coloured wires to the correct lengths so that they neatly fit to the correct terminals.

— Ensure that the Earth wire has more slack than any of the other wires.

— Remove some of the insulation to leave about 1cm of exposed metal core on each wire.

— Twist the strands of the wire together.

6.4 To connect the wires to the correct terminals:

— Loosen the screw heads above each terminal.

— Push the metal wire into the hole beneath each screw head.

Or, for other plug designs:

— Wind the metal wire around the screw.
— Tighten each screw.

6.4 Ensure that the insulation reaches right up to each terminal as illustrated and there are no loose strands of wire.

6.5 Fit the flex firmly onto the cord-grip making sure that the grip fastens onto the plastic sleeve of the flex and tighten screws.

6.6 Read the technical specification in these instructions to see what rating of Fuse is required and fit the correct fuse in the plug.

6.7 Fit the plug cover and make sure that the plug is not cracked or chipped.

Registration No WEE/DH1656ZW
In accordance with European Directive 2002/96/EC, waste electrical and electronic equipment (WEEE) must not be disposed of with household waste.

At the end of its useful life please take this product to an appropriate recycling centre or collection point. You can find your nearest recycling centre by using the bank locator at www.recycle-more.co.uk for UK customers, www.weeeireland.ie for customers in the Republic of Ireland, or by contacting your local authority.

Gazco Limited, Osprey Road, Sowton Industrial Estate, Exeter, Devon, England EX2 7JG
Tel: (01392) 261999 Fax: (01392) 444148 E-mail: info@gazco.com

A member of the Stovax Group