(P)8741CFLUC RIVA F67 PEDESTAL CONVENTIONAL FLUE - LOGS

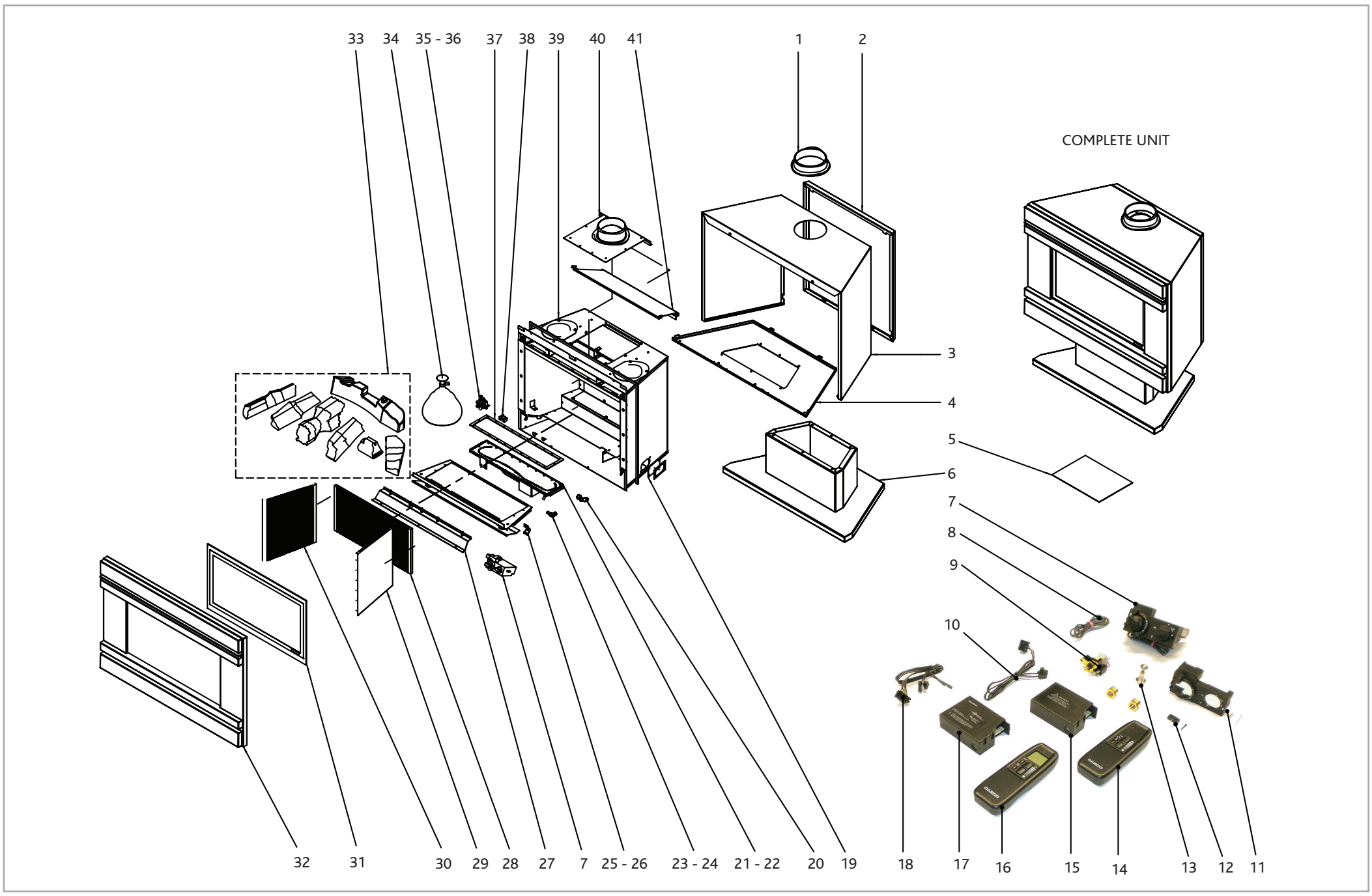

Ref. No.	Product Code	Description	Quantity
1	**8549**	BVENT CAST FLUE COLLAR	1
2	**GZ6087**	BACK PANEL	1
3	**GZ6085**	SHROUD C/F	1
4	**GZ6092**	WRAP BASE BENCH C/F	1
5	**GZ3677**	RIVA 53/67 BVENT INSTALLTION & FIXING	KIT
6	**GZ6288**	PEDESTAL BASE WELD ASSY	1
7	**GC0088K**	MERTIK VALVE/COVER GV36	1
8	**GC0090**	LEAD REMOTE	1
9	**EL0234**	GEARED MOTOR G30-EMS	1
10	**EL0237**	STANDARD RECV CABLE G30-ZRCS/350	1
11	**GC0087**	MERTIK CONTROL COVER G30-ZHN2	1
12	**EL0241**	MICRO SWITCH & SCREW G30-ZMS	1
13	**GC0092**	MAG UNIT G30-EP290/110	1
14	**EL0239**	STD BLK HANSET G30-ZRHSO-Z26	1
15	**EL0235**	STANDARD RECEIVER G30-ZRRS	1
16	**EL0240**	THERMOSTATIC H/SET G30-ZRHTT-Z27	1
17	**EL0236**	THERMOSTAT RECEIVER G30-ZRRT	1
18	**EL0238**	THERMOSTAT RECV CABLE G30	1
19	**FA0354**	GAS INLET SILICONE SEAL	1
20	**GC0095**	PRESSURE TEST RESTRICTOR ELBOW	1
21	**GZ3124**	BURNER UNIT ASSY NG	1
22	**GZ3125**	BURNER UNIT ASSY LPG	1
23	**IN0007**	400 ELBOW INJECTOR NG	1
24	**IN0040**	SINGLE HOOLE INJECTOR LPG	1
25	**GZ3867**	AERATION PLATE 67 BVENT CAS-G20 NG	1

Ref. No.	Product Code	Description	Quantity
26	**GZ2003**	AERATION PLATE LPG	1
27	**GZ3120**	SMALL BVENT CASSETTE LOG SUPPORT	1
28	**CE0345**	RIVA 67 REAR PANEL (REEDED)	1
29	**CE0347**	RIVA 67 SIDE PANEL RH (REEDED)	1
30	**CE0346**	RIVA 67 SIDE PANEL LH (REEDED)	1
31	**GZ3111**	GLASS PANEL ASSY	1
32	**8739BK67**	67 SPECTRUM ASSY	1
33	**CE0306**	RIVA 67/70 CASSETTE LOG SET	SET
34	**CE0424**	RIVA 67/70 GRANULE PACK	1
35	**PI0045**	OP 9247 LPG OXYPILOT (600mm LEAD)	1
36	**PI0044**	9066-NG OXYPILOT (600MM LEAD)	1
37	**CE0324**	BURNER SKIN GASKET	1
38	**PI0056**	PILOT GAUZE	1
39	**GZ9107**	MAIN HOUSING ASSY	1
40	**GZ5915**	SPIGOT PLATE ASSY	1
41	**GZ2057**	TOP BAFFLE	1