STOVAX

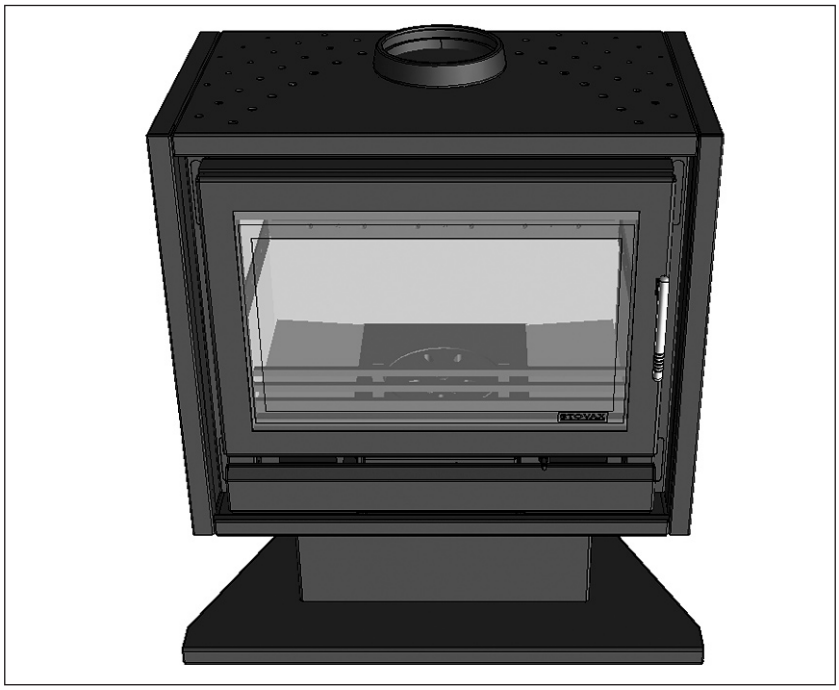

Riva Freestanding Pedestal

Installation Instructions

Product Codes: RVACPEDB (For use with RVF66 & RVF66B)

IMPORTANT

Please read these instructions carefully and in conjunction with the appropriate Riva instructions.
Care must be taken when handling the stove to avoid injury or damage to the stove.

PM212 ENG Issue 1 (August 2007)

ASSEMBLY INSTRUCTIONS

Packing list

- User Instructions
- 4 x M6 x 16 Hex head screws
- 4 x M6 Nuts
- 4 x M6 Washers
- 2 x Rawl plugs
- 2 x No.8 Hex Coach screw
- 2 x Plastic Caps

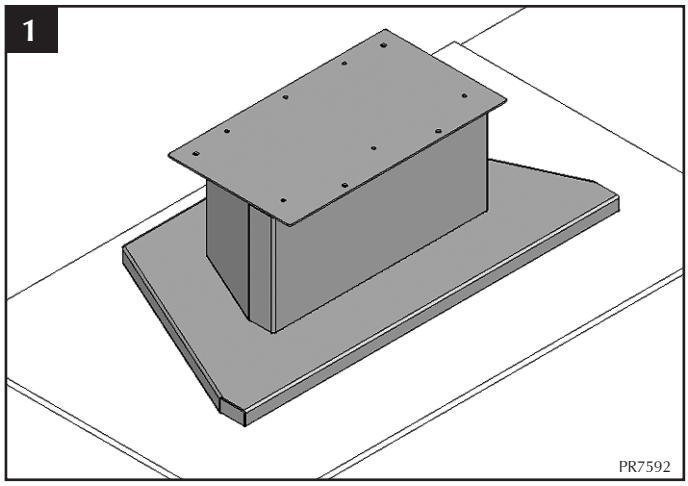

1. Position pedestal on your hearth.

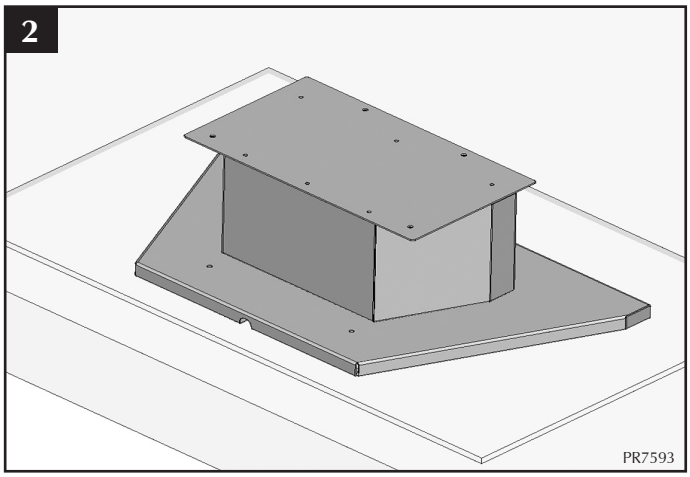

2. Mark out the holes in the back of the pedestal.

Tools required

- 10mm A/F Spanner
- 13mm A/F Spanner
- Hammer
- Power Drill with:
  - Ø8mm Masonry drill bit
  - Pozidrive attachment or screwdriver

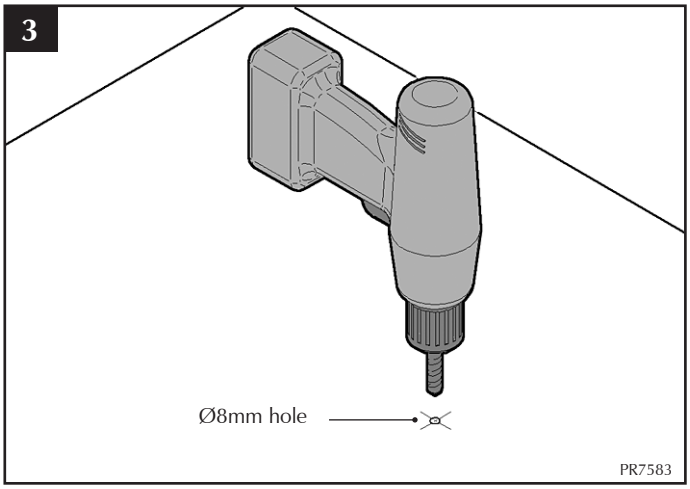

3. Remove pedestal and drill the two marked positions with Ø8mm hole to 50mm deep.

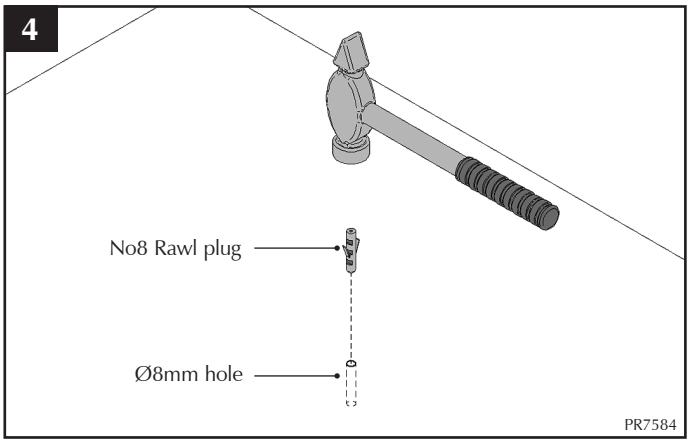

4. Tap in No.8 Rawl plugs.

ASSEMBLY INSTRUCTIONS

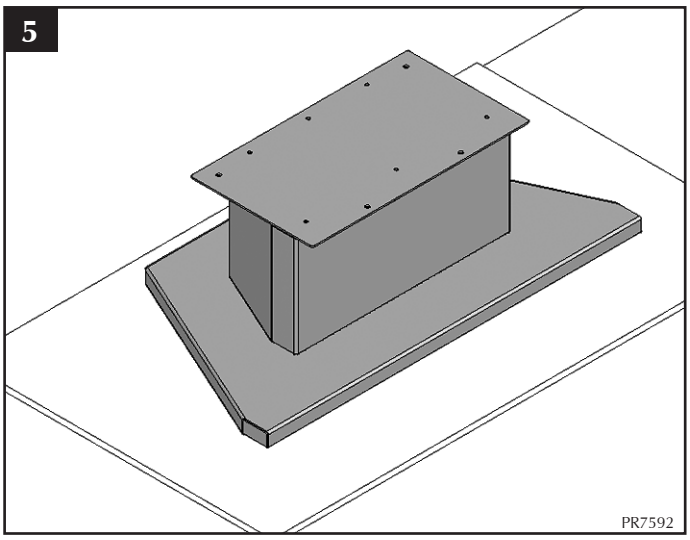

5. Re-position the pedestal over the two holes.

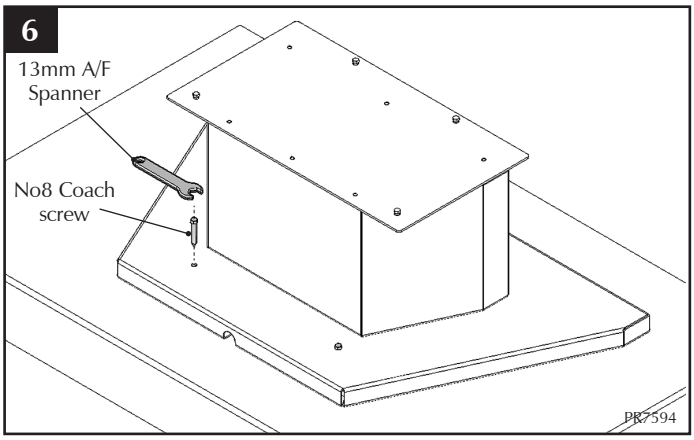

6. Screw in the No.8 Coach screws.

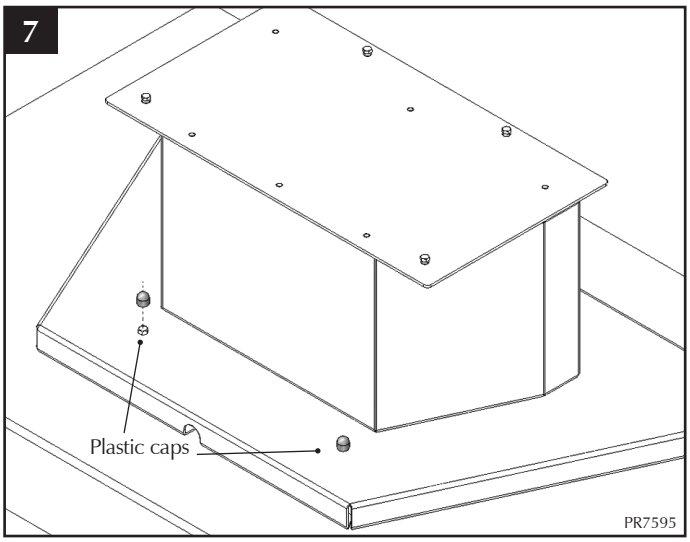

7. Place the two plastic caps over the screw heads.

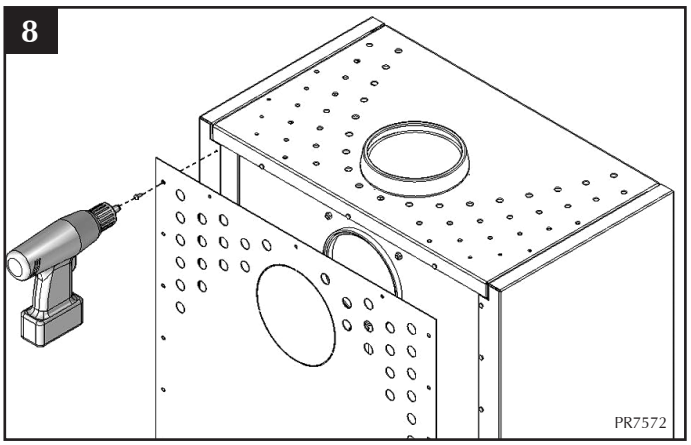

8. Remove back cover plate from the stove.

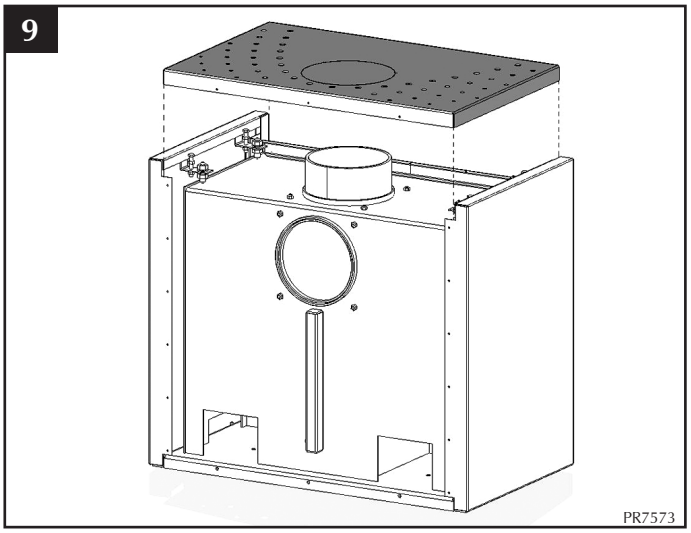

9. Lift off stove cover plate.

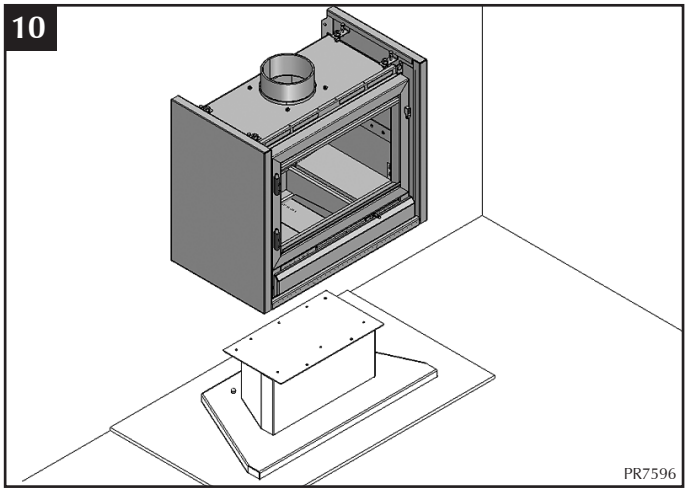

10. Firstly remove all internal parts from the stove and remove the door. Position the stove on the pedestal and line up the holes.

ASSEMBLY INSTRUCTIONS

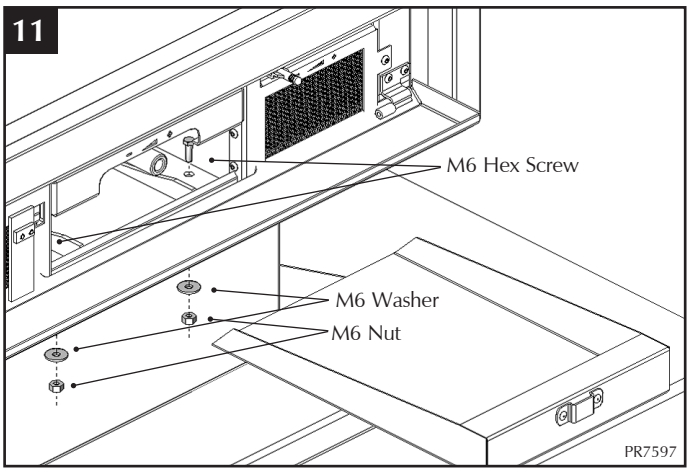

11. Remove the ash pan and insert the two hex screws, fixing with the nuts and washers. Tighten with a 10mm A/F spanner.

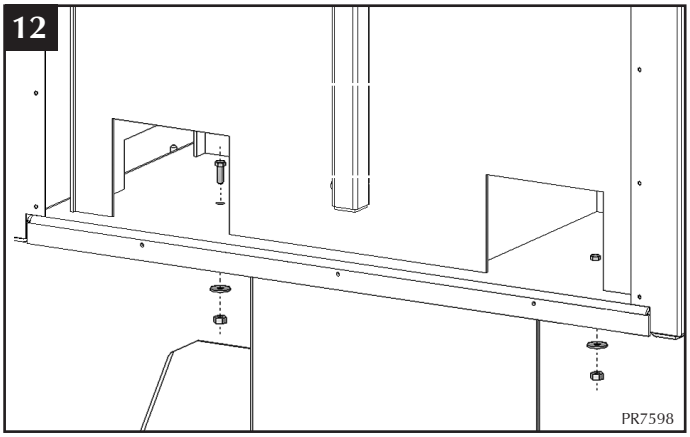

12 Repeat step 11 with rear screws.

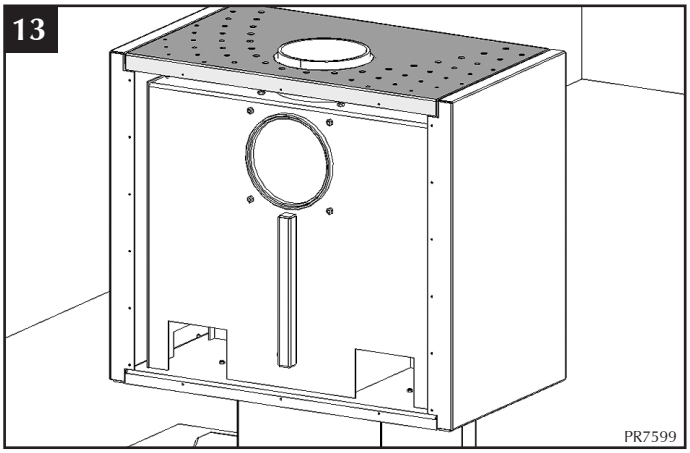

13. Replace the top cover plate.

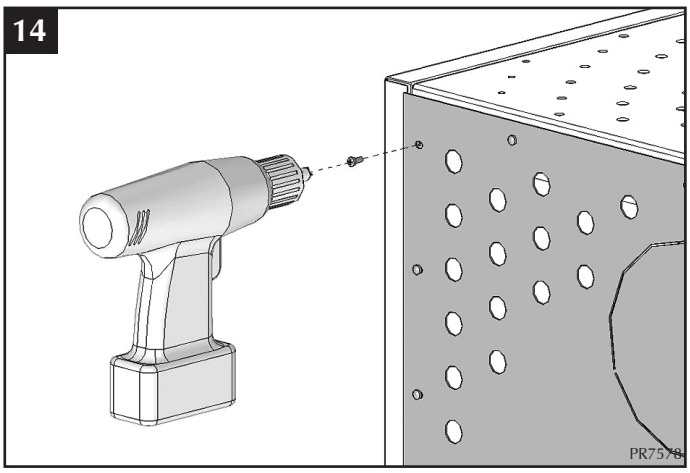

14. Re-attach the back cover plate, internal parts and door.

STOVAX

Stovax Ltd, Falcon Road, Sowton Industrial Estate, Exeter, Devon, England EX2 7LF
Tel: **(01392) 474011** Fax: **(01392) 219932** E-mail: **info@stovax.com** **www.stovax.com**